ALL DIMENSIONS IN MILLIMETERS EXCEPT PAY ITEMS AND UNLESS NOTED OTHERWISE

F.A.I. RTE.	SECTION	COUNTY	TOTAL SHEETS	SHEET NO.
80/94	2626.2-R-2	COOK/LAKE	1207	375
STA.		TO STA.		
FED. ROAD DIST. NO.		ILLINOIS	FED. AID PROJECT	

CONTRACT NO. 62114 INDOT DES. NO. 0100987

* Center of horizontal to center of splice dimension may vary. Verify before drilling holes in mounting tube.

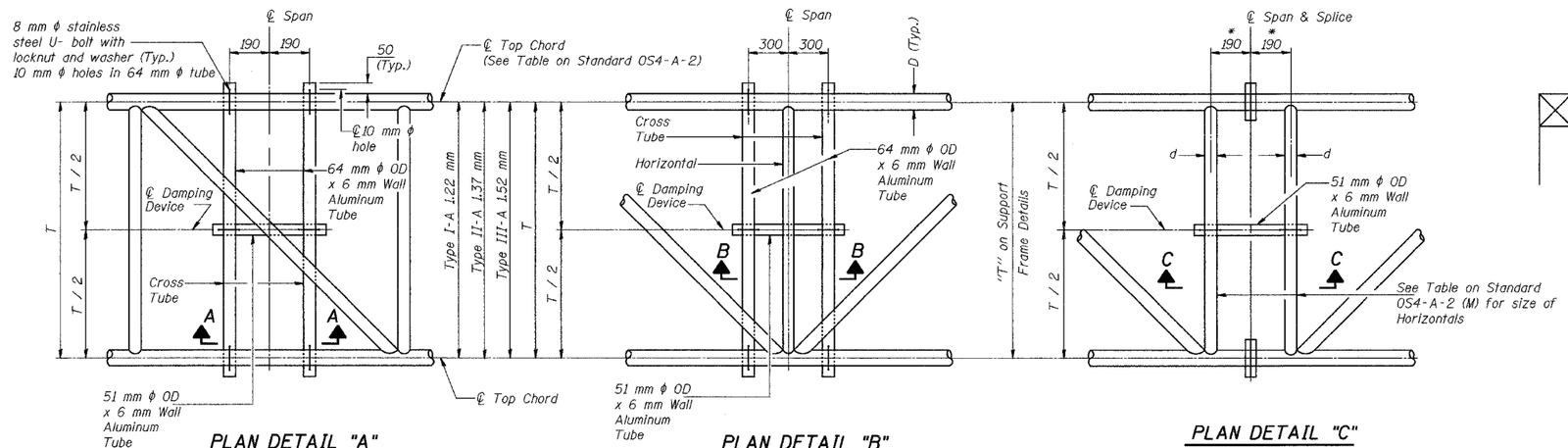

PLAN DETAIL "A"
℄ SPAN BETWEEN PANEL POINTS

PLAN DETAIL "B"
℄ SPAN AT PANEL POINT

PLAN DETAIL "C"
℄ SPAN AT ℄ CHORD SPLICE

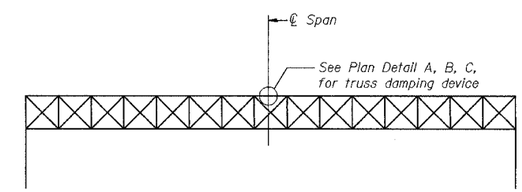

ELEVATION
Aluminum Overhead Sign Truss

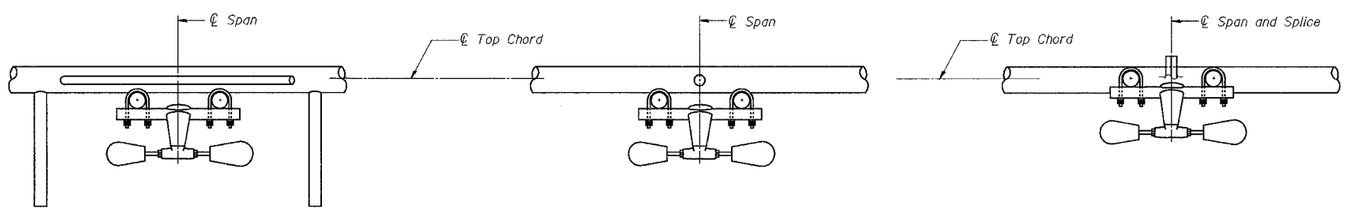

SECTION A-A

SECTION B-B

SECTION C-C

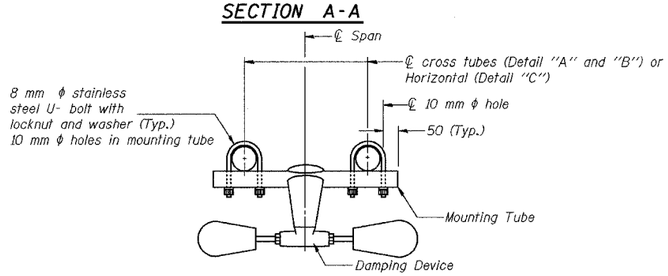

TRUSS DAMPING
(Typical)

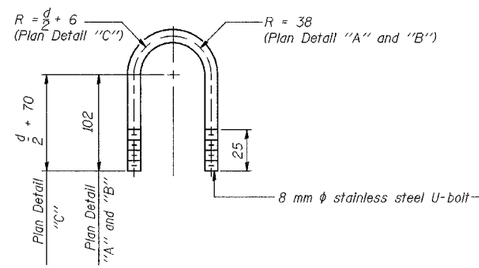

DAMPING DEVICE MOUNTING TUBE U-BOLT DETAIL
(Typical)

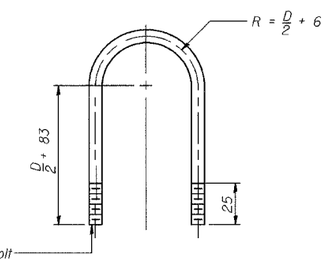

TOP CHORD TO CROSS TUBE U-BOLT DETAIL
(Typical - Detail "A" and "B")

NOTES

Damper: One damper per truss. (14 Kg Stockbridge-Type Aluminum) Cost included in "Overhead Sign Structure..."

Materials: Aluminum tubes shall be ASTM B221M alloy 6061 Temper T6. Cost included in "Overhead Sign Structure..."

All dimensions are in millimeters (mm) except as noted

REVISIONS	
NAME	DATE

ILLINOIS DEPARTMENT OF TRANSPORTATION
I-80/94/US 6
KINGERY-BORMAN EXPRESSWAY
BURNHAM ROAD TO US 41
OVERHEAD SIGN STRUCTURES
DAMPING DEVICE

SCALE NONE DRAWN BY ACE/CAD
DATE 07/05 CHECKED BY TAE

AMERICAN CONSULTING ENGINEERS

OS-A-D(M) 11/1/2002