ROUTE NO.	SECTION	COUNTY	TOTAL SHEETS	SHEET NO.
F.A.I. 80/94	2626.2-R-2	LAKE COUNTY, INDIANA	1207	608
		ILLINOIS FED. AID PROJECT-		

SHEET NO. S-29
40 SHEETS

CONTRACT NO. 62114 INDOT DES. NO. 0100987

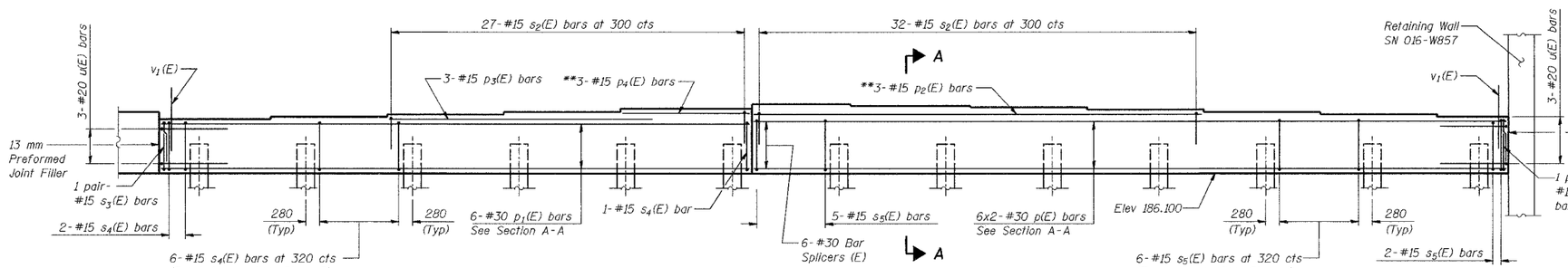

ELEVATION
(Looking East)

PILE DATA
Type - 356 ϕ Metal Shell
Capacity - 500 kN
Est Length - 15.3 m
*Est Length - 18.5 m
No Reqd - 12
Test Piles - 1

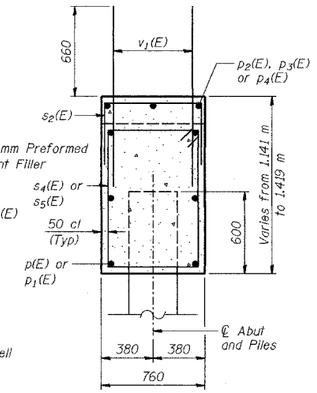

SECTION A-A

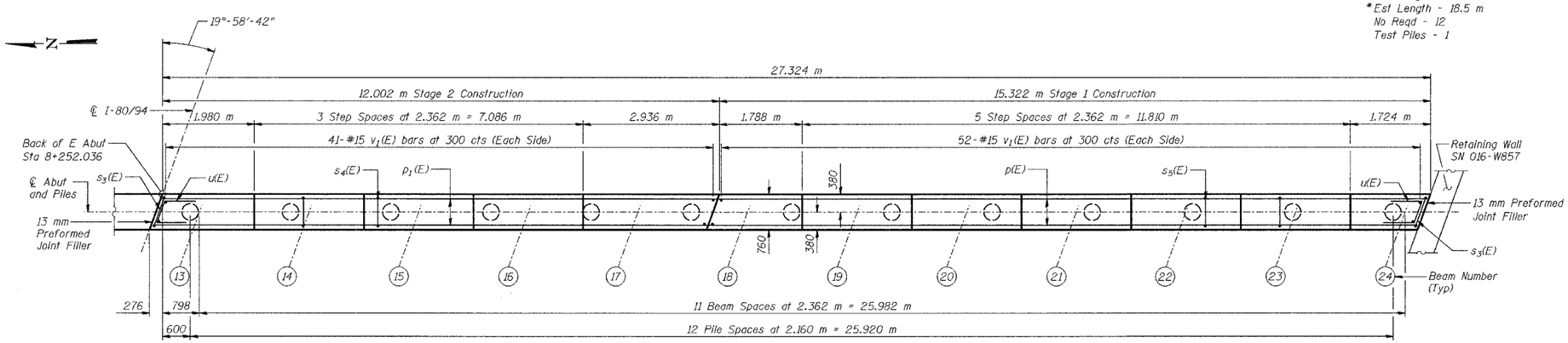

PLAN

BEARING SEAT ELEVATIONS

Beam	℄ E Abut
13	187.241
14	187.313
15	187.379
16	187.440
17	187.491
18	187.519
19	187.499
20	187.478
21	187.450
22	187.411
23	187.372
24	187.333

NOTES:

See Sheet No S-31 for reinforcement details and Bill of Material.

See Sheet No S-36 for concrete pile details.

Pour steps monolithically with cap.

Reinforcement bars designated (E) shall be epoxy coated.

Bars indicated thus 20 x 3-#15 etc. indicates 20 lines of bars with 3 lengths per line.

All dimensions are in millimeters (mm) except as noted.

All edges shall have standard 20 mm chamfers except as noted.

Cost of 13 mm Preformed Joint Filler included with Concrete, A, Substructure.

* For the 3 southernmost piles, which are outside the Limits of Existing Structure.

** Cut bars to fit in field.

MINIMUM BAR LAPS
#15 bars = 640
#20 bars = 790
#30 bars = 1850

DESIGNED	BHS
CHECKED	KFA
DRAWN	MJB
CHECKED	GSP

ILLINOIS DEPARTMENT OF TRANSPORTATION
F.A.I. ROUTE 80/94 (BORMAN EXPRESSWAY)
OVER HOHMAN AVENUE

EAST ABUTMENT – EASTBOUND
SECTION 2626.2–R–2
LAKE COUNTY, INDIANA
STATION 8+225.132
STRUCTURE NO. I–80–1–8459 (EB & WB)
DATE 09/05 **(016–I001 & 016–I002)**

AMERICAN CONSULTING ENGINEERS