F.A.I. RTE.	SECTION	COUNTY	TOTAL SHEETS	SHEET NO.
80/94	2626.2-R-2	COOK	1207	750
STA.		TO STA.		
FED. ROAD DIST. NO.		ILLINOIS	FED. AID PROJECT	

CONTRACT NO. 62114

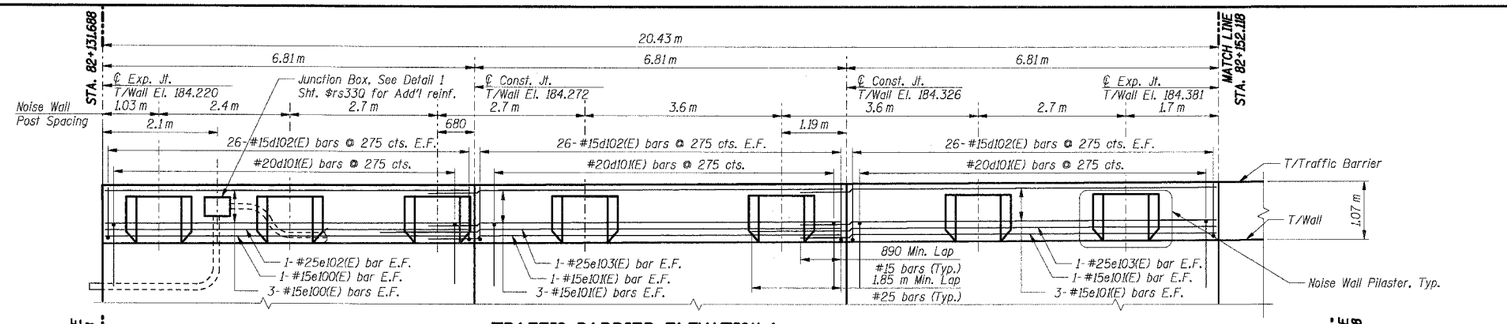

TRAFFIC BARRIER ELEVATION 1

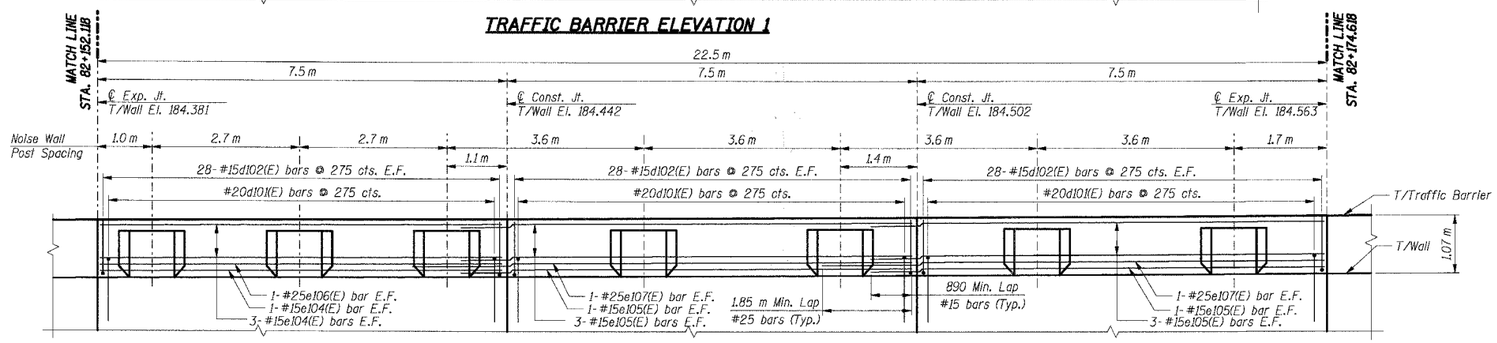

TRAFFIC BARRIER ELEVATION 2

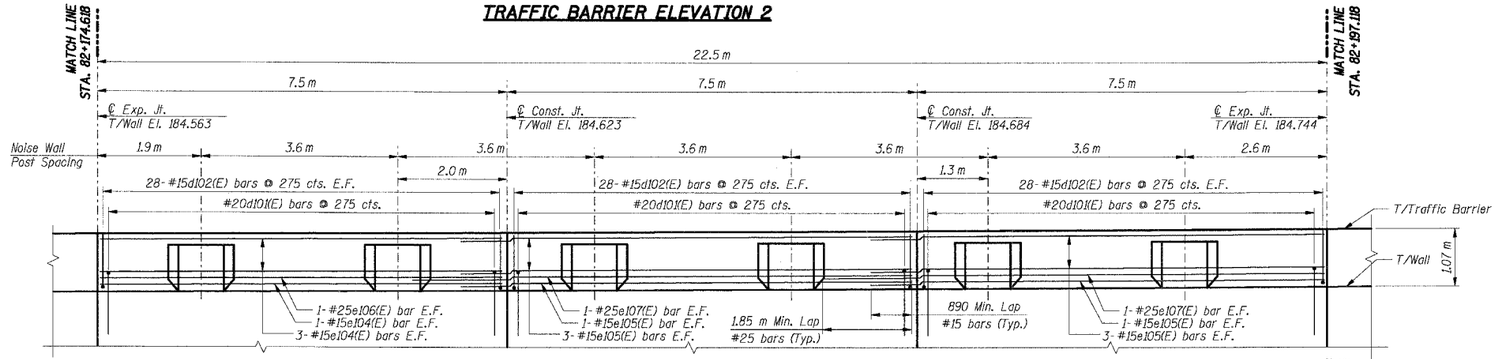

TRAFFIC BARRIER ELEVATION 3

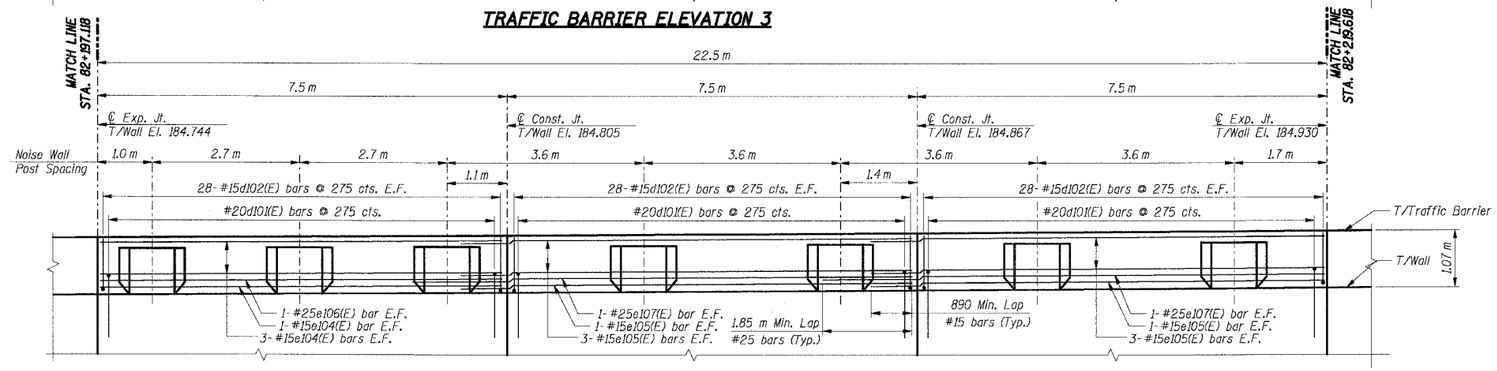

TRAFFIC BARRIER ELEVATION 4

BILL OF MATERIAL

Bar	No.	Size	Length (m)	Shape
d102(E)	676	#15	1.22	
d204(E)	189	#15	1.30	
e100(E)	8	#15	6.71	
e101(E)	16	#15	7.70	
e102(E)	2	#25	6.71	
e103(E)	4	#25	8.66	
e104(E)	24	#15	7.42	
e105(E)	48	#15	8.39	
e106(E)	6	#25	7.42	
e107(E)	12	#25	9.35	
e208(E)	81	#15	2.56	
e212(E)	27	#15	2.20	
e290(E)	4	#15	0.60	
u203(E)	189	#20	2.00	

Item	Unit	Total
Concrete Structures	Cu m	42.1
Reinforcement Bars, Epoxy Coated	kg	4,990

For Bending Diagrams see Sht. RW847-44.

THIS SHEET FOR INFORMATION ONLY

Notes:

1. All dimensions are in millimeters (mm) except as noted.
2. All dimensions shown are along the front face of the retaining wall.
3. All vertical bars in wall stem and traffic barrier start at 50 mm from construction and expansion joint, U.N.O.
4. Reinforcement bars designated (E) shall be epoxy coated.
5. All edges shall have a 20 mm chamfer unless noted otherwise.
6. E.F. indicates each face, B.F. indicates back face, F.F. indicates front face.
7. For Traffic Barrier details and Noise Wall Pilaster details see Sht. RW847-44.

SHT. RW847-35 OF 54

REVISIONS	
NAME	DATE

MORCOM, N.V., INC.
CONSULTING ENGINEERS
CHICAGO, ILLINOIS

ILLINOIS DEPARTMENT OF TRANSPORTATION
F.A.I. ROUTE 80/94 (KINGERY EXPRESSWAY)
LOCAL ROADS RECONSTRUCTION
RETAINING WALL - STRUCTURE NO. 016-W847
SECTIONS 2001-167R AND (2425 & 2626) R-1
COOK COUNTY

TRAFFIC BARRIER ELEVATION I

DATE: 3/10/2004
DRAWN BY: VV
CHECKED BY: BK

TENG
TENG & ASSOCIATES, INC.
ENGINEERS/ARCHITECTS/PLANNERS
CHICAGO, ILLINOIS

$$$$$Prof Jlst:name$$$$$
7-7-2005,15:33:42 T:\DOCUMENTS\93750\STRUCTURE\RS87752A.DGN
1 2 3 4 5 6 7 8 9 10 11 12 13 14 15 16 17 18 19 20 21 22 23 24 25 26 27 28 29 30 31 32 33 34 35 36 37 38 39 40 41 42 43 44 45 46 47 48 49 50 51 52 53 54 55 56 57 58 59 60 61 62 63
BA:ZEKKJ