F.A.I. RTE.	SECTION	COUNTY	TOTAL SHEETS	SHEET NO.
57	2323.1F	COOK	011	3
STA.		TO STA.		
FED. ROAD DIST. NO.	ILLINOIS	FED. AID PROJECT		

CONTRACT NO. 62815

BENCHMARK
Square cut on the east end of curb at the northeast corner of first alley north of 99th street approximately 35 feet east of Lasalle street. Elev. 16.35 feet.

EXISTING STRUCTURE TO BE REMOVED
Structure No. 016-0072 Single span, 117'-4" back to back of abutments, composite steel plate girder bridge on closed abutments. The structure is 37'-0" out to out of deck.

SALVAGE:
None.

STAGING:
Traffic will be maintained utilizing staged construction. For details, see Sht. S-2.

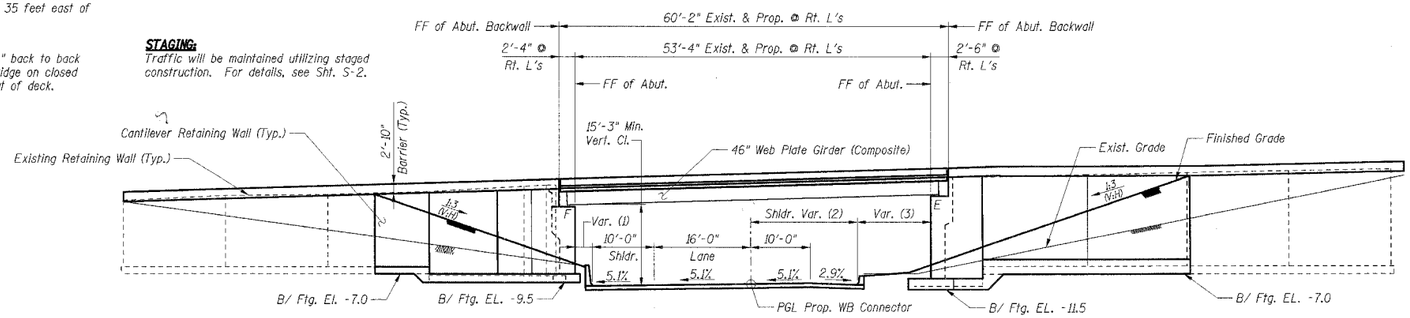

ELEVATION

(1) 4'-11⅝" Min., 5'-⅛" Max.
(2) 15'-3⅜" Min., 18'-0" Max.
(3) 6'-6⅝" Min., 10'-11⅜" Max.

Notes:
1. Dimensions along WB Connector are perpendicular to ℄ WB Connector
2. Elevation view developed perpendicular to the southeast fascia girder.
3. TCP = Taper Control Point at toe of parapet or barrier wall.
4. FF denotes front face.
5. See electrical plans for underpass lighting.

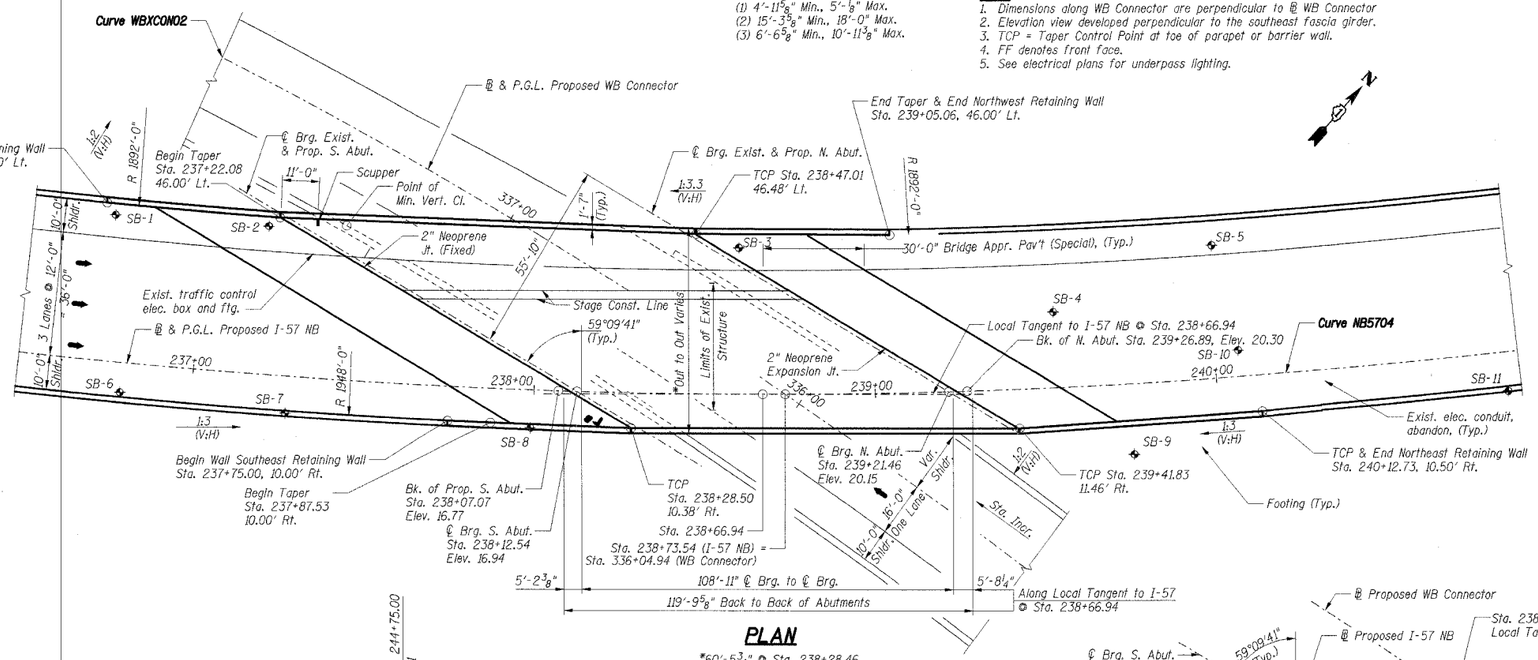

PLAN

*60'-5¾" @ Sta. 238+28.46
59'-9⅛" @ Sta. 238+47.20

DESIGN SPECIFICATIONS
2002 AASHTO Standard Specifications for Highway Bridges

DESIGN LOADING:
Roadway Live Load: HS 20-44 & Alt.
Future Wearing Surface = 50 psf

DESIGN STRESSES:
Concrete, f'c = 3,500 psi
Reinforcement, fy = 60,000 psi
Structural Steel, fy = 50,000 psi (M 270 Grade 50)

SEISMIC DATA:
Seismic Performance Category (SPC) = A
Bedrock Acceleration Coefficient (A) = 0.04g
Site Coefficient (S) = 1.0

Prop. Curve WBXCON02
PI Sta. 337+82.29
Δ = 19° 30' 40" (LT)
D = 3° 40' 23"
T = 268.19'
R = 1,559.85'
L = 531.18'
E = 22.89'
PC Sta. 335+14.10
PT Sta. 340+45.28
SE = 5.1%

Prop. Curve NB5704
PI Sta. 235+20.23
Δ = 56° 09' 47" (LT)
D = 2° 57' 23"
T = 1,033.99'
R = 1,938.00'
L = 1,899.69'
E = 258.59'
PC Sta. 224+86.23
PT Sta. 243+85.92
SE = 5.5%

APPROVED
FOR STRUCTURAL ADEQUACY ONLY
Ralph E. Anderson
ENGINEER OF BRIDGES AND STRUCTURES

COMPANY:
TENG & ASSOCIATES INC.
ENGINEERS/ARCHITECTS/PLANNERS
205 N MICHIGAN AVE.
CHICAGO IL 60601

SIGNATURE:
NAME: BYRON DANLEY
LICENSE NO.: 081-004737
LICENSE EXP.: November 30, 2006
DATE: October 10, 2005

SEAL
STATE OF ILLINOIS BYRON T. DANLEY 081-004737 CHICAGO IL LICENSED STRUCTURAL ENGINEER

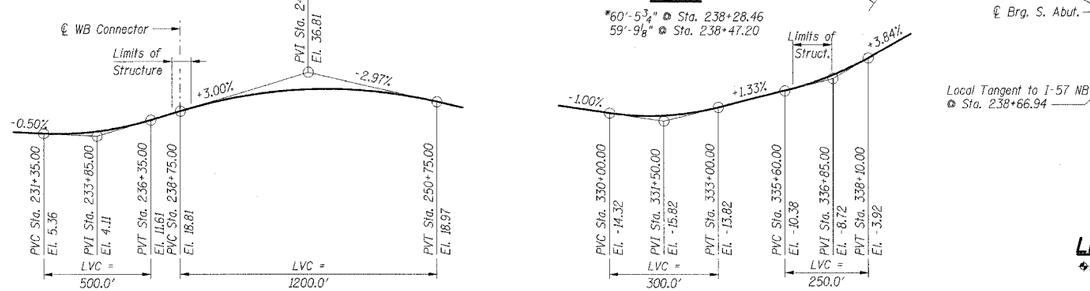

PROFILE GRADE PROPOSED I-57 NB

PROFILE GRADE PROPOSED WB CONNECTOR

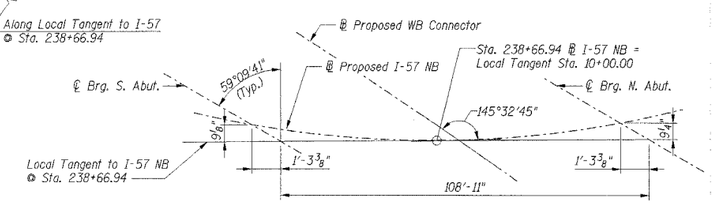

OFFSET SKETCH

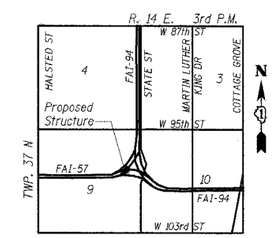

LOCATION MAP

LEGEND

SB-0 Soil Boring Location

ONLY STRUCTURAL STEEL AND BEARING FABRICATION IS INCLUDED IN THIS CONTRACT

SHT. S-1

REVISIONS	
NAME	DATE

ILLINOIS DEPARTMENT OF TRANSPORTATION
F.A.I. ROUTE 57 (INTERSTATE 57)
BEAM & BEARING FABRICATION
I-57 NB OVER WB CONNECTOR
EXISTING SN 016-0072, PROPOSED SN 016-2852
STA. 238+73.54, COOK COUNTY, SECTION 2323.1F
GENERAL PLAN AND ELEVATION

DATE: 10/20/05
DRAWN BY: VV
CHECKED BY: RDS

TENG
TENG & ASSOCIATES, INC.
ENGINEERS/ARCHITECTS/PLANNERS
205 N. MICHIGAN AVE., CHICAGO, IL 60601
TELEPHONE: 312.616.0000

.\ALTDOWS1.DGN, ..\TSL00VV1.DGN, ..\TPR00907.DGN, ..\TPR00746.DGN, ..\EXCDOWP2.DGN, ..\REWOOVS6.DGN, ..\SBLOWB6.DGN, ..\DWPDWS5.DGN, ..\HDWDOWP.DGN, ..\ABTDOWE5.DGN, ..\ABTDOWEL.DGN, ..\REMOOWRZ.DGN, ..\ABTDOWEL.DGN, ..\BRBORDER.DGN
09-19-2005, 12:09:39 T:\DOCUMENT\1939810\STRUCT\00VV\GPEDOWN.DGN
USER: TG