STATE OF ILLINOIS
DEPARTMENT OF TRANSPORTATION

ROUTE NO.	SECTION	COUNTY	TOTAL SHEETS	SHEET NO.
		Cook	14	10
FED. ROAD DIST. NO. 7		ILLINOIS	FED. AID PROJECT-	

SHEET NO. 4
4 SHEETS

Contract Number: 62912

Notes:
All Posts shall be normal to parapet.
All joints in rail shall be spliced per detail.
Provide 1-1/8" and 2-1/16" Aluminum Shims for 25% of the Posts. Rail elements shall be parallel to Grade-high spots will be ground and low spots shimmed.
This work shall be paid for at the contract unit price per foot for Removing and Re-erecting Existing Railing.
Horizontal rail element & rail posts shown are for information only.

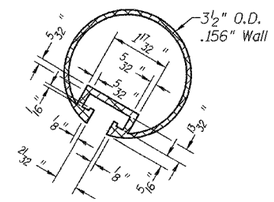

SECTION THRU TOP RAIL

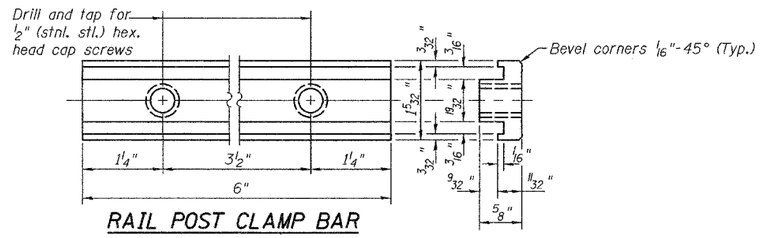

RAIL POST CLAMP BAR
For Top Rail

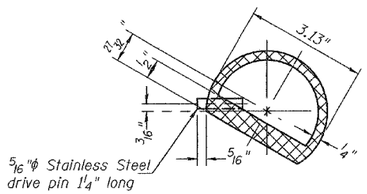

SECTION THRU SPLICE
TOP RAIL

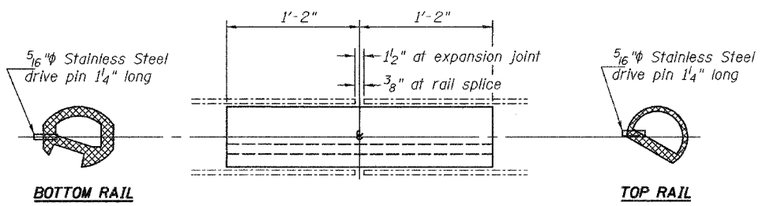

BOTTOM RAIL

RAIL SPLICE

TOP RAIL

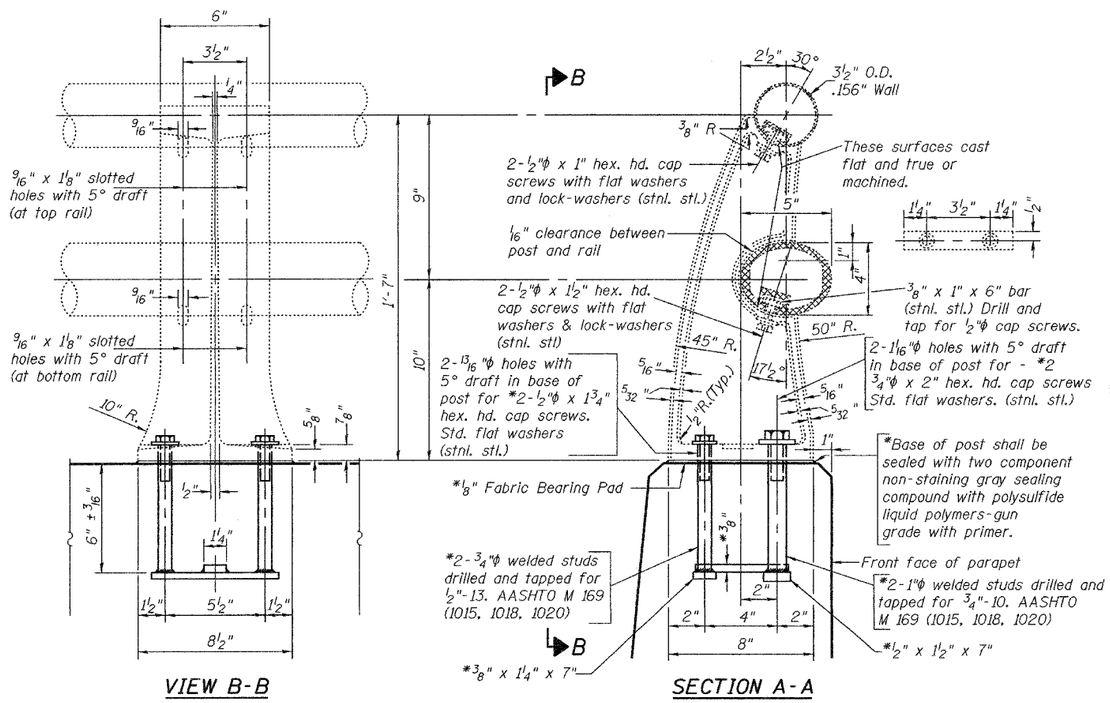

VIEW B-B

SECTION A-A

RAIL POST DETAILS

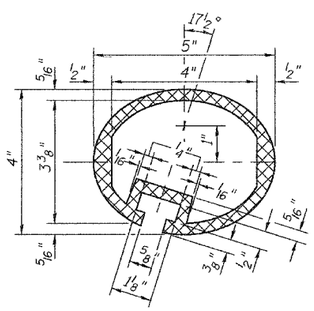

SEC. THRU ELLIPTICAL RAIL SECTION

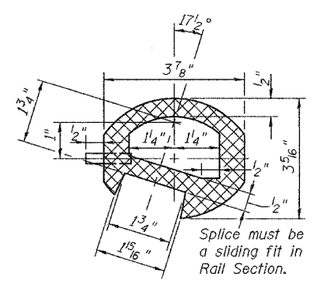

SEC. THRU SPLICE

* New Rail Post anchorage devices will be required at each location where posts are connected to new construction. Cost shall be included with Removing and Re-erecting Existing Railing.

DESIGNED	V.H.V.
CHECKED	S.J.B.
DRAWN	Drew Christopher
CHECKED	V.H.V. S.J.B.

May 3, 2005
EXAMINED John A. Morris — ENGINEER OF STRUCTURAL SERVICES
PASSED Ralph E. Anderson — ENGINEER OF BRIDGES AND STRUCTURES

ALUMINUM RAILING DETAIL
F.A.P. RT. 343
COOK COUNTY
SN 016-0525

...\projects\sac00034\0160525.dgn 5/3/2005 4:14:52 PM