ROUTE NO.	SECTION	COUNTY	TOTAL SHEETS	SHEET NO.
FAP 681	116BR-1	FORD	37	23
STA		TO STA		
FED. ROAD DIST. NO. 4	ILLINOIS	FED. AID PROJECT-		

DWG. NO. 11 OF 15

CONTRACT NO. 66561

STATE OF ILLINOIS
DEPARTMENT OF TRANSPORTATION

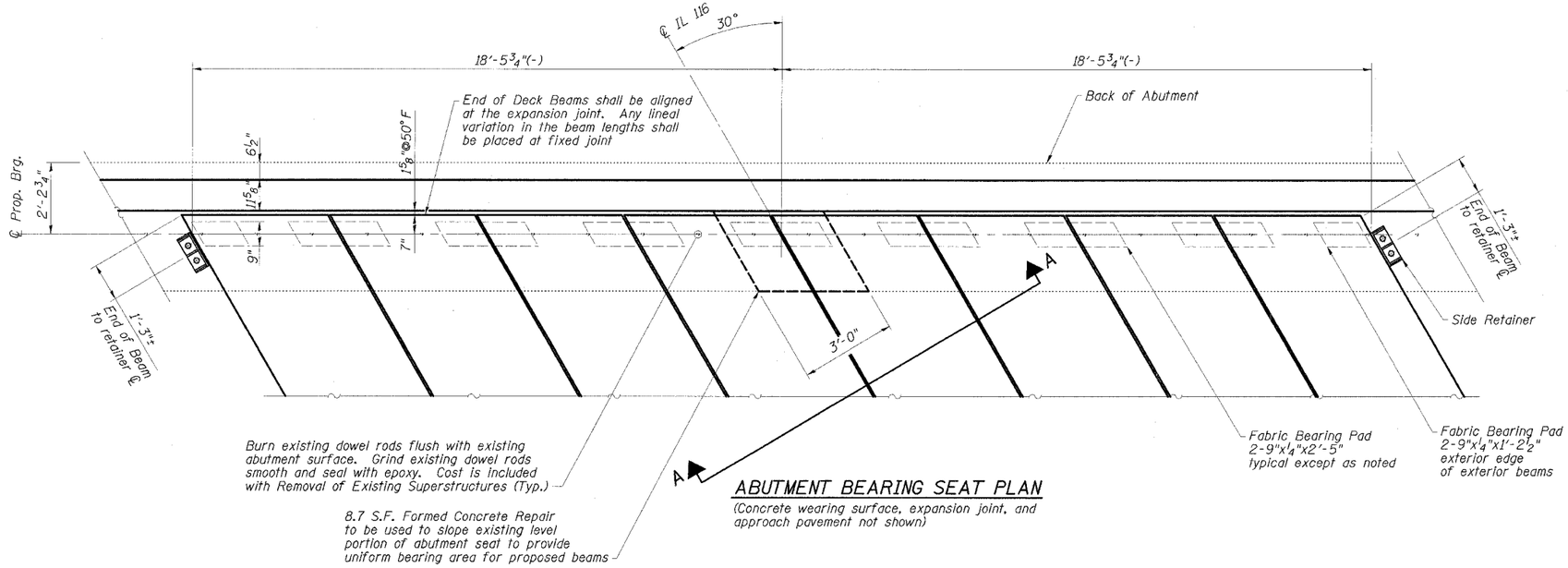

ABUTMENT BEARING SEAT PLAN

(Concrete wearing surface, expansion joint, and approach pavement not shown)

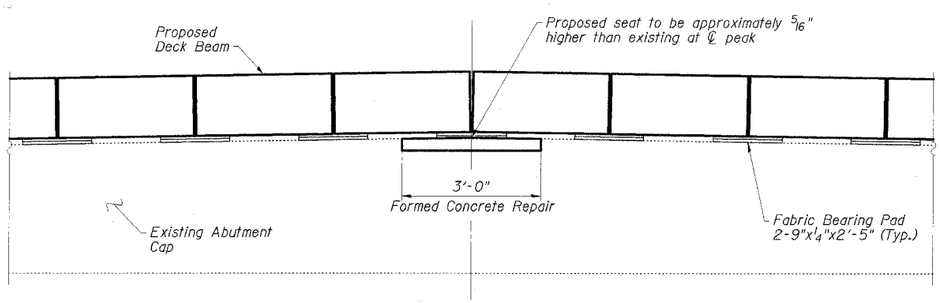

SECTION A-A

(Concrete wearing surface not shown)

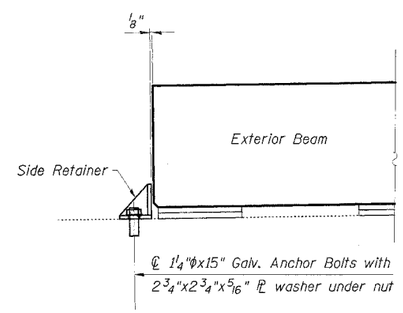

EXTERIOR BEAM RETAINER DETAILS

(4 Required)

Cost of Retainer Angles, Anchor Bolts & accessories are included with Precast Prestressed Concrete Deck Beams. Fill ⅛" gap with shim ℙ to provide temporary lateral support until shear keys have been grouted and concrete wearing surface has been placed.

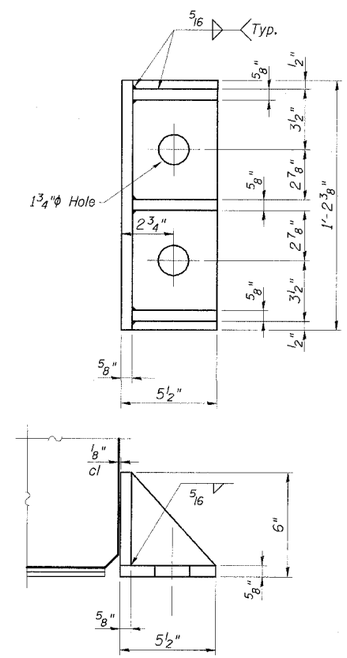

SIDE RETAINER

Equivalent rolled angle with stiffeners will be allowed in lieu of welded plates.

ESCA CONSULTANTS, INC.

DESIGNED BY:	ELH	5/05
DRAWN BY:	DWH	5/05
CHECKED BY:	ELH	10/05
APPROVED BY:	RDP	10/05

ABUTMENT DETAILS
IL 116 OVER KELLY CREEK
FAP ROUTE 681 - SECTION 116BR-1
FORD COUNTY
STATION 60+53.00
STRUCTURE NO. 027-0044