CONTRACT NO. 72449

F.A.U. RTE.	SECTION	COUNTY	TOTAL SHEETS	SHEET NO.
*	**	SANGAMON	261	16
STA. ***		TO STA. ***		
FED. ROAD DIST. NO.	ILLINOIS	FED. AID PROJECT		

* 7978 (OLD US 36) & 7968 (CAMP BUTLER RD.)
** 3R(BR, BR-1, BR-2), 19RS-8
*** W.B. OLD US 36 FR. STA 31+82.50 TO 46+29.70
*** W.B. CAMP BUTLER FR. STA 22+42.20 TO 24+15.00

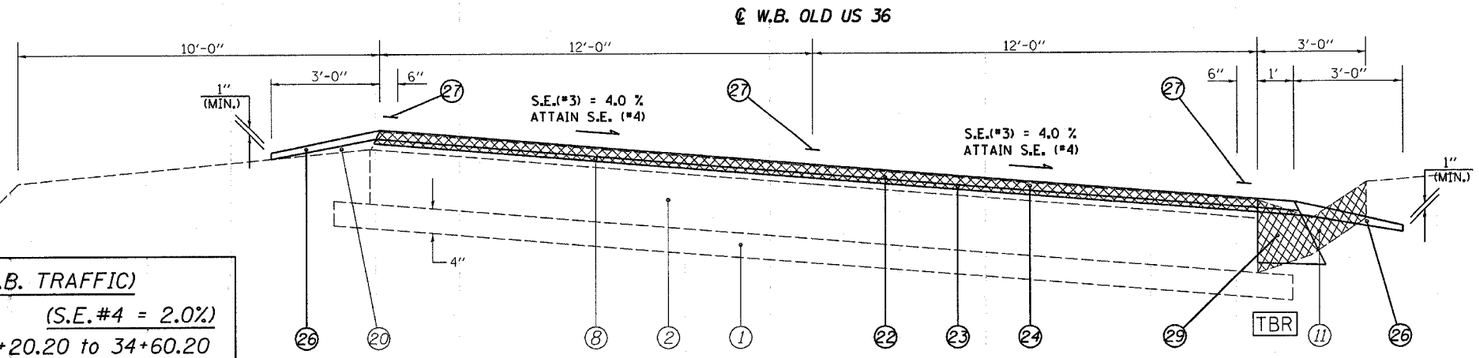

(W.B. TRAFFIC)

FULL S.E.: (S.E.#4 = 2.0%)
STA 28+20.20 to 34+60.20

S.E. TRANSITION:
STA 26+71.60 TO 28+20.20
STA 34+60.20 TO 36+08.80

(23) STA 31+82.50 TO 37+75.00 [592.5']

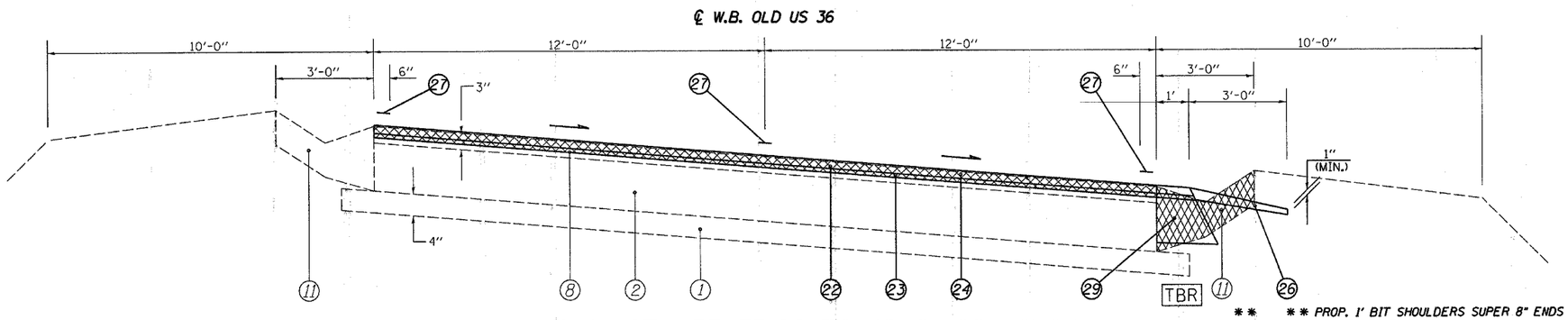

(24) STA 37+75.00 TO 39+25.00 [150']

(cont on pg6)

** SEE NOTE

** PROP. 1' BIT SHOULDERS SUPER 8" ENDS AT STA 38+70.70 RT

LEGEND

1. EXIST. SUB-BASE GRANULAR MATERIAL
2. EXIST. P.C.C. PAVEMENT 9"
3. EXIST. P.C.C. PAVEMENT 9"-6"-9"
4. EXIST. P.C.C. PAVEMENT 10"
5. EXIST. BITUMINOUS BASE COURSE 10"
6. EXIST. P.C.C. BASE COURSE WIDENING 9"
7. EXIST. STABILIZED BASE COURSE 10"
8. EXIST. BITUMINOUS OVERLAY
9. EXIST. BITUMINOUS SHOULDERS
10. EXIST. PIPE UNDERDRAIN 6"
11. EXIST. CONCRETE GUTTER, TYPE A (MODIFIED)
12. EXIST. CONCRETE GUTTER, TYPE B
13. EXIST. CONCRETE GUTTER, TYPE C (MODIFIED)
14. EXIST. P.C.C. CURB & GUTTER, TYPE 10 (MODIFIED)
15. EXIST. P.C.C. CURB & GUTTER, TYPE 6
16. EXIST P.C.C. CURB & GUTTER, TYPE 6 (MODIFIED)
17. EXIST P.C.C. CURB & GUTTER, TYPE 7
18. EXIST P.C.C. CURB, TYPE 4
19. EXIST. P.C.C. CURB, TYPE 10 (MODIFIED)
20. EXIST. AGGREGATE SHOULDERS, TYPE B
21. PROP. BITUMINOUS SURFACE REMOVAL (VARIABLE DEPTH) ✳
22. PROP. BITUMINOUS SURFACE REMOVAL 2"
23. PROP. LEVELING BINDER (MACHINE METHOD), SUPERPAVE N70 $\frac{3}{4}$"
24. PROP. BITUMINOUS CONCRETE SURFACE COURSE, SUPERPAVE, MIX "D", N70 $1\frac{1}{2}$"
25. PROP. BITUMINOUS SHOULDERS SUPERPAVE
26. PROP. AGGREGATE SHOULDERS, TYPE B
27. PROP. PAINT PAVEMENT MARKING - LINE 5"
28. PROP. CONCRETE GUTTER, TYPE A (MODIFIED)
28. PROP. CONCRETE GUTTER, TYPE A (MODIFIED)
29. PROP. BITUMINOUS SHOULDER SUPERPAVE 8"

✳ NOMINAL MILLING DEPTH $\frac{1}{2}$"

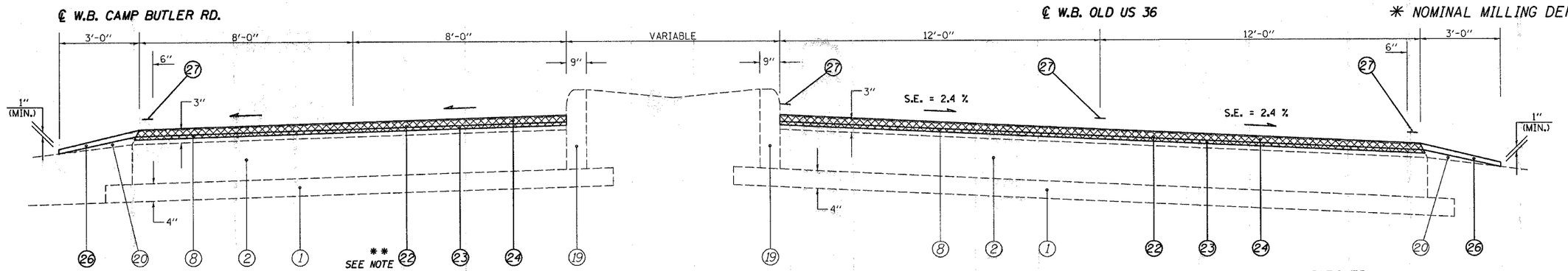

(fr pg22; cont on pg11) (64) STA 22+42.20 TO 24+15.00 [172.8']

** SEE NOTE

(26) STA 44+77.00 TO 46+29.70 [152.7']

** NOTE:
MILLING DEPTH TAPERS FR $\frac{1}{2}$" TO 2" FR.
STA 22+42.200 TO 22+72.20

REVISIONS	
NAME	DATE

ILLINOIS DEPARTMENT OF TRANSPORTATION

TYPICAL SECTIONS

F.A.U. Route 7978 (OLD US 36) &
F.A.U. Route 7968 (CAMP BUTLER RD.)
Section 3R(BR,BR-1,BR-2), 19RS-8
SANGAMON COUNTY

SCALE: VERT. HORIZ. DRAWN BY: JWC
DATE: JULY 20, 2005 CHECKED BY: RSC

•DGN=SPEC•
•DATE-TIME•
•REF01

D6 PROJECT: D652102 FILE: TYPICALS.DGN