CONTRACT NO. 72449

F.A.U. RTE.	SECTION	COUNTY	TOTAL SHEETS	SHEET NO.
*	**	SANGAMON	261	21
STA. ***		TO STA. ***		
FED. ROAD DIST. NO.	ILLINOIS	FED. AID PROJECT		

* 7978 (OLD US 36) & 7968 (CAMP BUTLER RD.)
** 3R(BR, BR-1, BR-2), 19RS-8
*** OLD US 36 FR. STA 85+84.30 TO 90+82.40
*** 7TH ST. EXIT FR. STA 89+55.40 TO 90+82.40

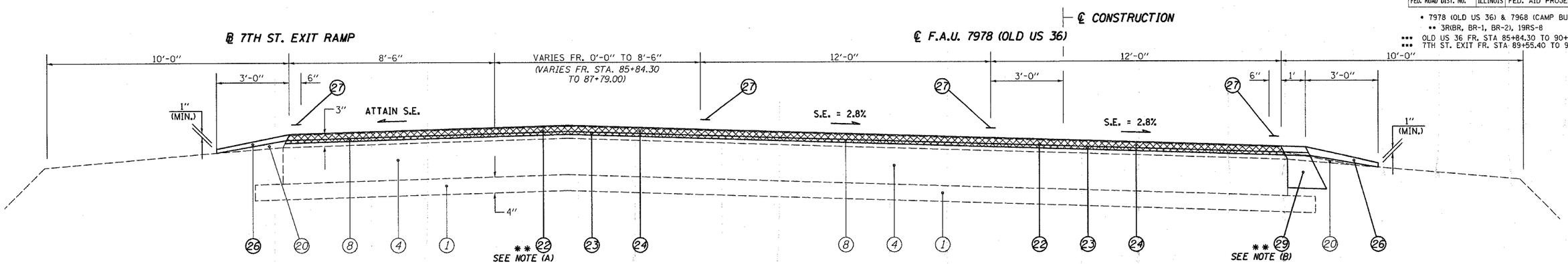

℄ OLD US 36

[194.7'] (40) STA 85+84.30 TO 87+79.00

[153.8'] STA 87+79.00 TO 89+32.80

℄ CONSTRUCTION

STA 185+80.10 TO 187+74.80 [194.7']

STA 187+74.80 TO 189+28.50 [153.7']

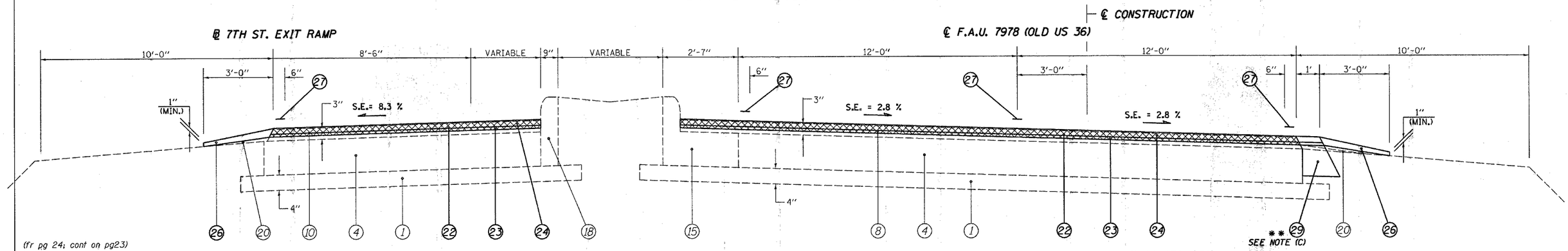

(fr pg 24; cont on pg23)

[127'] (74) STA 89+55.40 TO 90+82.40 (EXIT)

℄ OLD US 36

[37.2'] (41) STA 89+32.80 TO 89+70.00

℄ CONSTRUCTION

STA 189+28.50 TO 189+65.70 [37.2']

LEGEND

1. EXIST. SUB-BASE GRANULAR MATERIAL
2. EXIST. P.C.C. PAVEMENT 9"
3. EXIST. P.C.C. PAVEMENT 9"-6"-9"
4. EXIST. P.C.C. PAVEMENT 10"
5. EXIST. BITUMINOUS BASE COURSE 10"
6. EXIST. P.C.C. BASE COURSE WIDENING 9"
7. EXIST. STABILIZED BASE COURSE 10"
8. EXIST. BITUMINOUS OVERLAY
9. EXIST. BITUMINOUS SHOULDERS
10. EXIST. PIPE UNDERDRAIN 6"
11. EXIST. CONCRETE GUTTER, TYPE A (MODIFIED)
12. EXIST. CONCRETE GUTTER, TYPE B
13. EXIST. CONCRETE GUTTER, TYPE C (MODIFIED)
14. EXIST. P.C.C. CURB & GUTTER, TYPE 10 (MODIFIED)
15. EXIST. P.C.C. CURB & GUTTER, TYPE 6
16. EXIST P.C.C. CURB & GUTTER, TYPE 6 (MODIFIED)
17. EXIST P.C.C. CURB & GUTTER, TYPE 7
18. EXIST P.C.C. CURB, TYPE 4
19. EXIST. P.C.C. CURB, TYPE 10 (MODIFIED)
20. EXIST. AGGREGATE SHOULDERS, TYPE B
21. PROP. BITUMINOUS SURFACE REMOVAL (VARIABLE DEPTH) ✳
22. PROP. BITUMINOUS SURFACE REMOVAL 2"
23. PROP. LEVELING BINDER (MACHINE METHOD), SUPERPAVE N70 ¾"
24. PROP. BITUMINOUS CONCRETE SURFACE COURSE, SUPERPAVE, MIX "D", N70 1½"
25. PROP. BITUMINOUS SHOULDERS SUPERPAVE
26. PROP. AGGREGATE SHOULDERS, TYPE B
27. PROP. PAINT PAVEMENT MARKING - LINE 5"
28. PROP. CONCRETE GUTTER, TYPE A (MODIFIED)
29. PROP. BITUMINOUS SHOULDER SUPERPAVE 8"
30. PROP. GRADING AND SHAPING SHOULDERS

✳ NOMINAL MILLING DEPTH ½"

** NOTE:

(A) MILLING DEPTH TAPERS FR. ½" TO 2" FR. STA 88+70.00 TO 89+00.00 (188+65.70 TO 188+95.70)

(B) PROP. 1' BIT SHOULDERS SUPER 8" ENDS AT STA 89+20.00 RT (189+15.70 RT)

(C) PROP. BIT SHOULDERS SUPER 8" TAPERS FR. 1' TO 6' FR. STA 89+20.00 TO 89+70.00 RT (189+15.70 TO 189+65.70 RT)

NOT TO SCALE

REVISIONS	
NAME	DATE

ILLINOIS DEPARTMENT OF TRANSPORTATION

TYPICAL SECTIONS

F.A.U. Route 7978 (OLD US 36) &
F.A.U. Route 7968 (CAMP BUTLER RD.)
Section 3R(BR,BR-1,BR-2), 19RS-8
SANGAMON COUNTY

SCALE: VERT. HORIZ. DRAWN BY: JWC
DATE: JULY 20, 2005 CHECKED BY: RSC

•DGN-SPEC•
•DATE-TIME•
•REF 01