CONTRACT NO. 72449

F.A.U. RTE.	SECTION	COUNTY	TOTAL SHEETS	SHEET NO.
*	**	SANGAMON	261	206
STA.		TO STA.		
FED. ROAD DIST. NO.	ILLINOIS	FED. AID PROJECT		

* 7978 (OLD US 36) & 7968 (CAMP BUTLER RD)
** 3R(BR, BR-1, BR-2), 19RS-8

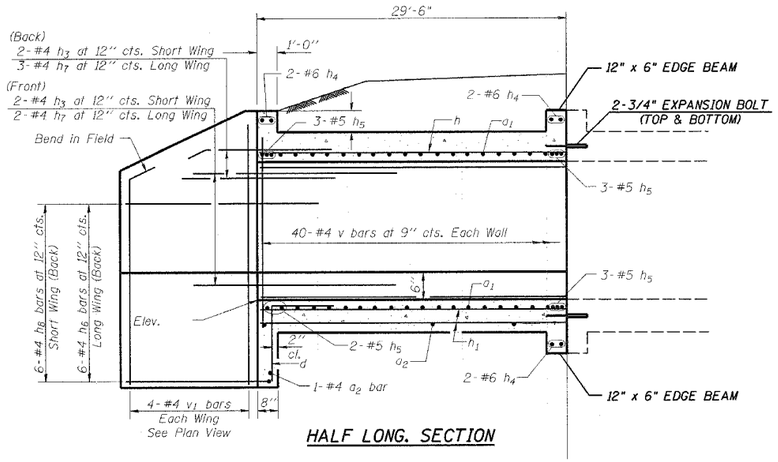

HALF LONG. SECTION

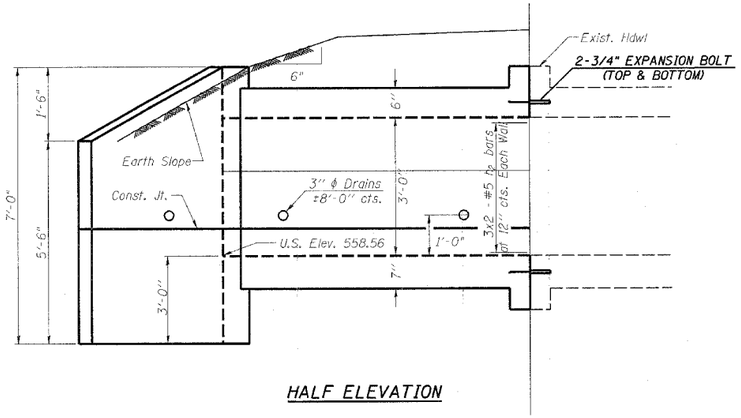

HALF ELEVATION

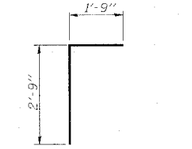

BAR d

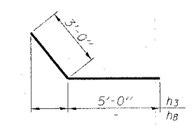

BARS h3 & h8

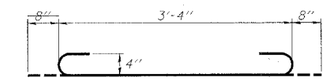

BAR a1

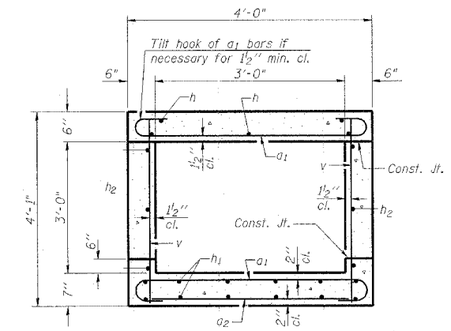

SECTION THRU BARREL

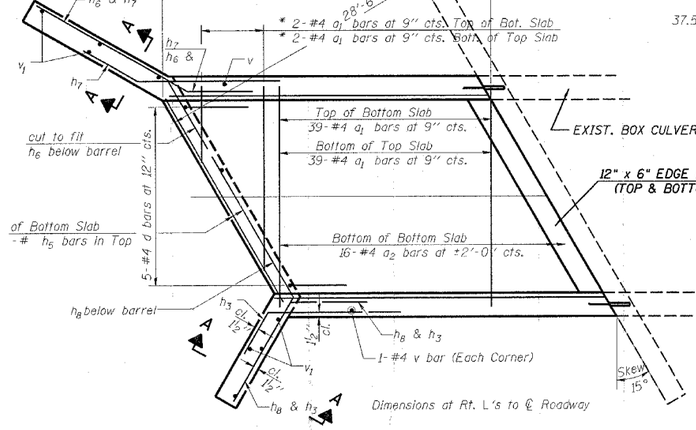

SHOWING REINFORCEMENT

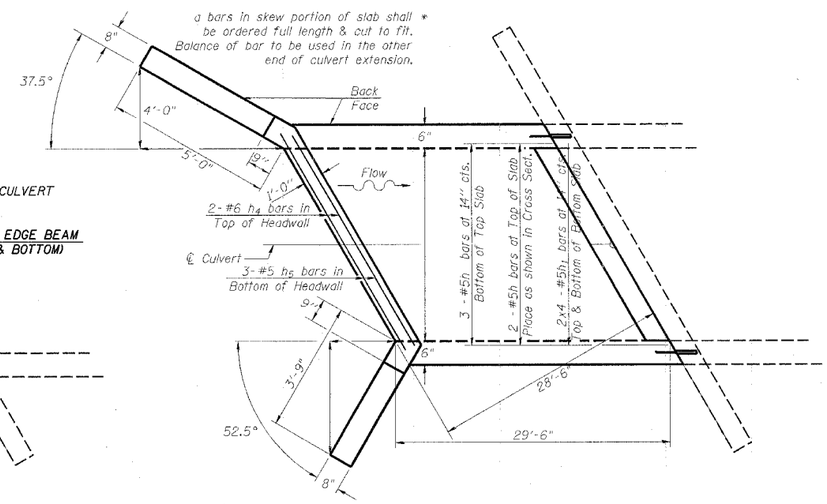

SHOWING OUTLINES

PLAN

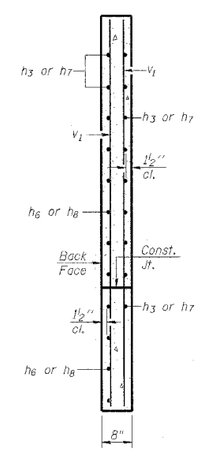

SECTION A-A

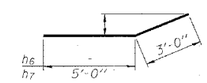

BARS h6 & h7

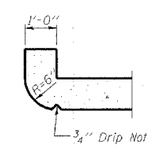

SECTION THRU HEADWALL
(Up Stream End Only)

DESIGN STRESSES

fy = 60,000 psi
f'c = 3,500 psi

LOADING HS 20-44 & ALT.

BILL OF MATERIAL

Bar	No.	Size	Length	Shape
a1	82	#4	4'-8"	
a2	16	#4	3'-9"	
d	5	#4	4'-6"	
h	5	#6	29'-3"	
h1	8	#4	29'-3"	
h2	6	#5	29'-3"	
h3	4	#4	8'-0"	
h4	6	#6	3'-10"	
h5	11	#5	3'-10"	
h6	6	#4	8'-0"	
h7	6	#4	8'-0"	
h8	6	#4	8'-0"	
v	82	#4	3'-9"	
v1	8	#4	6'-2"	
Expansion Bolts ¾"			Each	8
Concrete Box Culverts			Cu. Yd.	10
Reinforcement Bars			Pound	1,304

NOTES

A distance of half the length of the wingwall but not less than six feet of the barrel shall be poured monolithically with the wingwalls.

Reinforcement Bars shall conform to the requirements of AASHTO M-31, M-42 or M-53, Grade 60.

Bars indicated thus 12 x 4-#5 etc. indicates 12 lines of bars with 4 lengths per line.

All construction joints shall be bonded.

REVISIONS	
NAME	DATE

ILLINOIS DEPARTMENT OF TRANSPORTATION

CULVERT EXTENSION DETAILS

F.A.U. Route 7978 (Old US 36) &
F.A.U. Route 7968 (CAMP BUTLER RD.)
Section 3R(BR, BR-1, BR-2), 19RS-8
SANGAMON COUNTY

SCALE: VERT. HORIZ.
DATE: JUNE 30, 2005
DRAWN BY:
CHECKED BY: RSC

(CAMP BUTLER RD.)

SSB-H-R 10-22-04

SHTPLANCLVRTDTL.DGN

PLOT DATE = 11/2/2005
FILE NAME = c:\projects\ed552182\shtplancl vrtdtl.dgn
PLOT SCALE = 50.0000 ' / IN.
USER NAME = cookjm