FAU RTE	SECTION	COUNTY	TOTAL SHEETS	SHEET NO.
7000	02-00212-00-BR	VERMILION	59	25
FROM STA. 96+00.00		TO STA. 103+10.10		
FED. ROAD DIST. NO.	ILLINOIS	FED. AID PROJECT		

CONTRACT NO. 91285

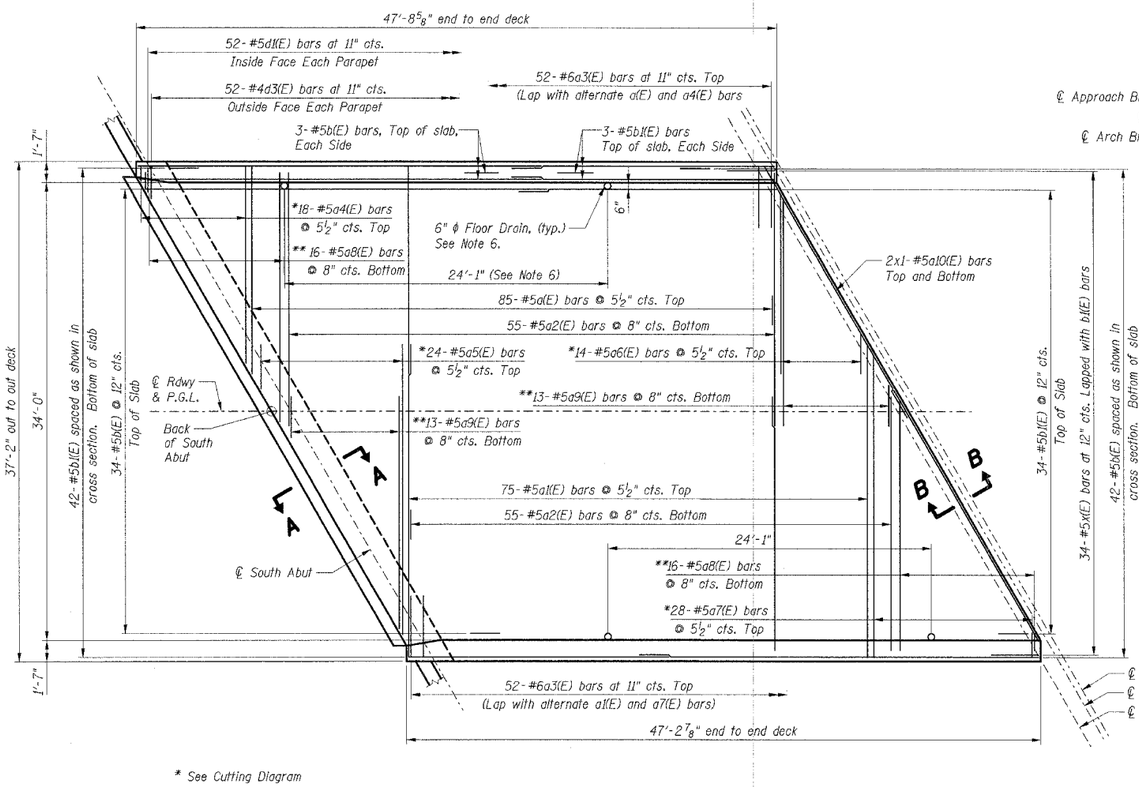

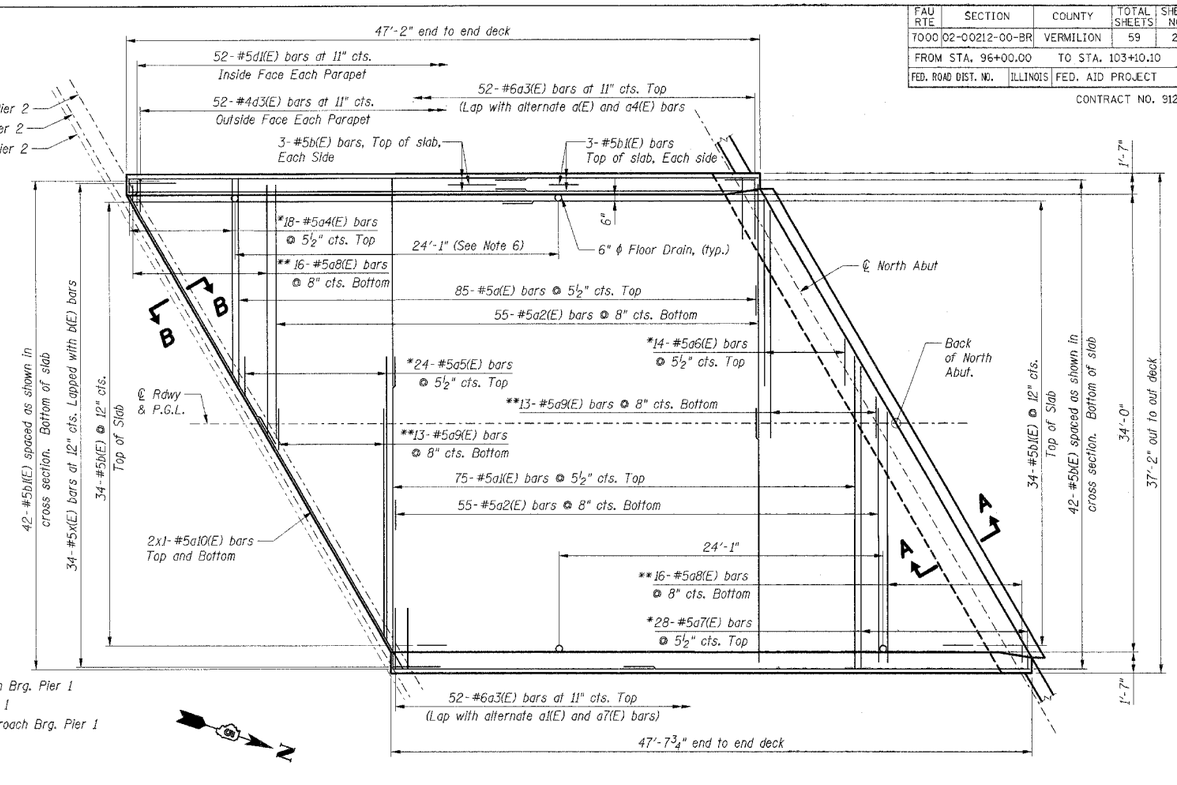

* See Cutting Diagram

** Order a8(E), a9(E) bars full length Cut to fit skew and use reminder of bars in opposite end.

DECK PLAN

Bar Cutting Diagram

Bar	N Bars	A	B	C	D	E
a4(E)	9	15'-1"	14'-7"	1'-1"	8'-3"	7'-5"
a5(E)	12	24'-11"	21'-7"	3'-4"	12'-10"	12'-1"
a6(E)	7	17'-2"	13'-9"	3'-5"	9'-0"	8'-2"
a7(E)	14	23'-6"	22'-6"	1'-0"	12'-2"	11'-4"

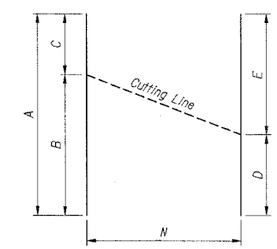

FIELD CUTTING DIAGRAM

Order bars full length and cut as shown.

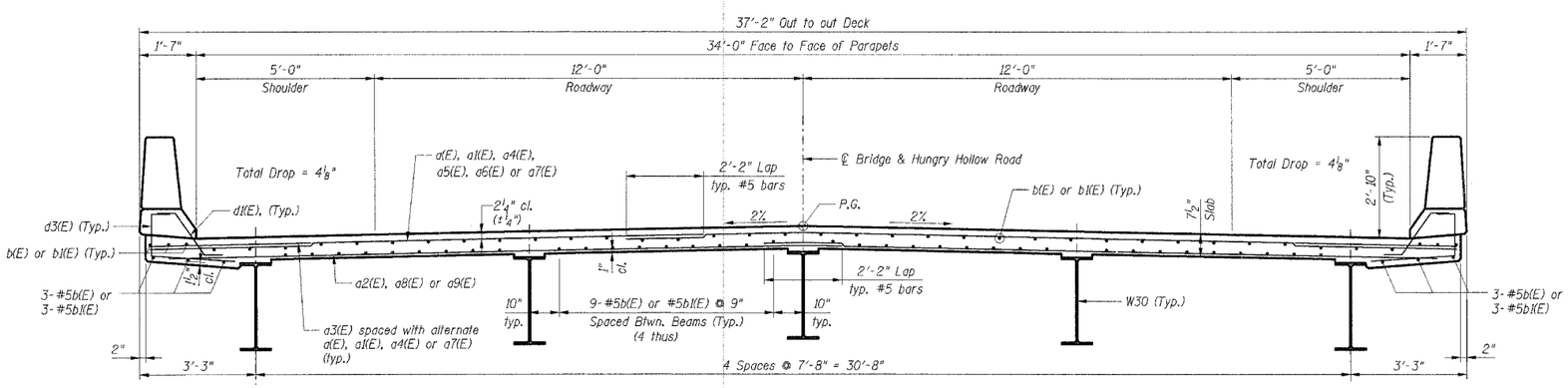

CROSS SECTION

Notes:

1. Reinforcement bars designated (E) shall be epoxy coated
2. Bars indicated thus 20x3-#5 etc. indicates 20 lines of bars with 3 lengths per line.
3. For Parapet reinforcement and Bill of Material, see Sht. S-12.
4. For Section A-A, see Sht. S-34.
5. For Section B-B, see Sht. S-12.
6. For Drain Details, see Sht. S-12.

SHT. S-10 OF 40

REVISIONS	
NAME	DATE

CITY OF DANVILLE, ILLINOIS
HUNGRY HOLLOW ROAD BRIDGE

DECK PLAN & CROSS SECTION
APPROACH SPANS

SCALE:
DATE 12/06/05
DRAWN BY LAR
CHECKED BY JRH

TENG
TENG & ASSOCIATES, INC.
ENGINEERS AND ARCHITECTS PLANNERS
205 N. MICHIGAN AVE. CHICAGO, IL 60601
TELEPHONE 312.616.1000

ROSSPF

..\GFEDOOP7X.DGN,..\GFEDOOP7X.DGN,..\TTB00029.DGN,..\DKF00P88.DGN,..\FRP00P5Y.DGN
12-07-2005, 15:25:54
S:\DOCUMENT\02336902\STRUCT\DGN\DKF00P88.DGN