FAU RTE	SECTION	COUNTY	TOTAL SHEETS	SHEET NO.
7000	02-00212-00-BR	VERMILION	59	42
FROM STA. 96+00.00		TO STA. 103+10.10		
FED. ROAD DIST. NO.	ILLINOIS	FED. AID PROJECT		

CONTRACT NO. 91285

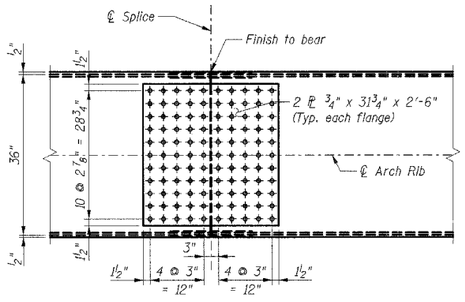

SECTION C-C

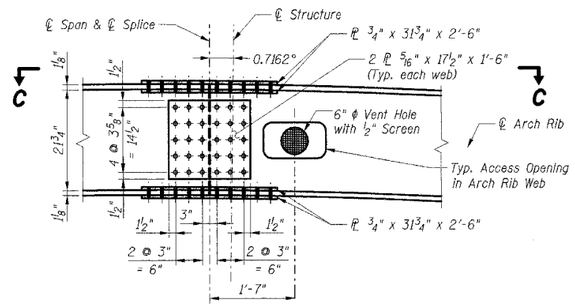

SPLICE AT ℄ SPAN

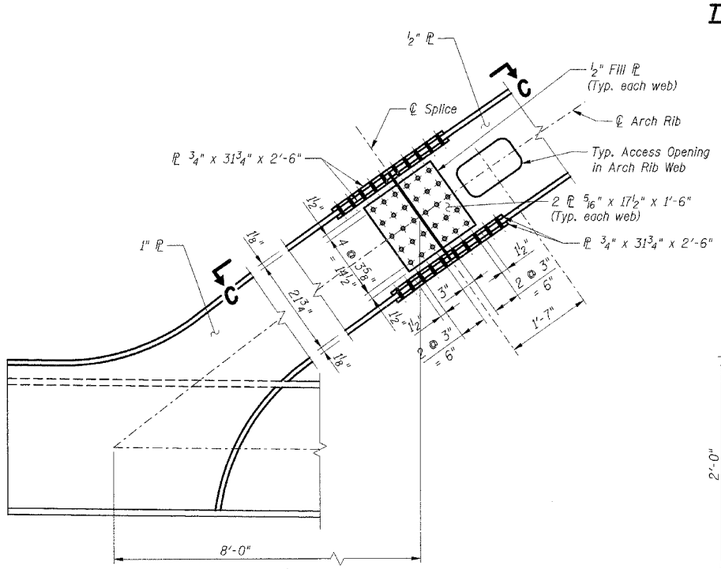

SPLICE NEAR END OF ARCH RIB

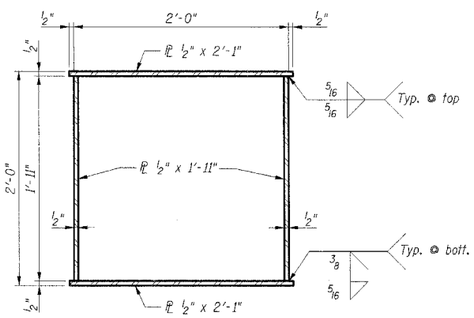

TYPICAL BRACE CROSS SECTION

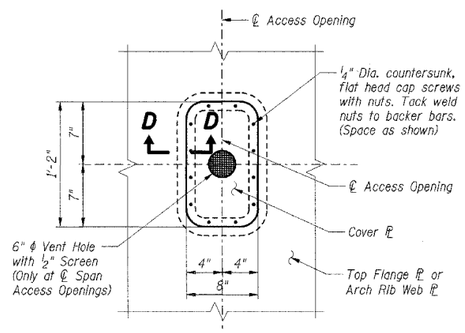

TYPE "B" ACCESS OPENING DETAIL

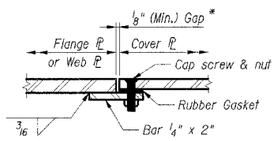

SECTION D-D

* Fill gap with silicone sealant. Cost of silicone sealant and rubber gasket not to be paid for separately but to be included in the cost of other items.

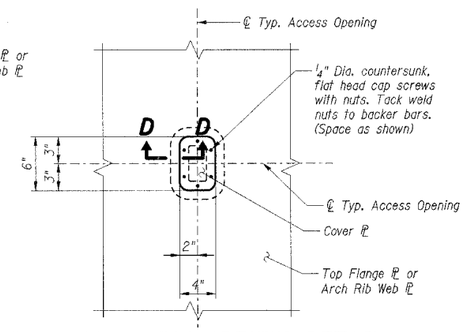

TYPE "A" ACCESS OPENING DETAIL

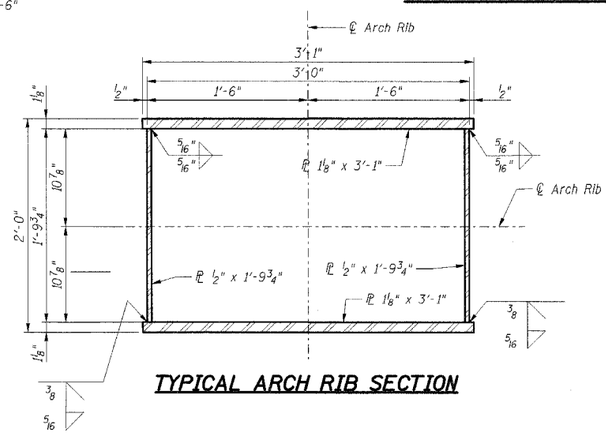

TYPICAL ARCH RIB SECTION

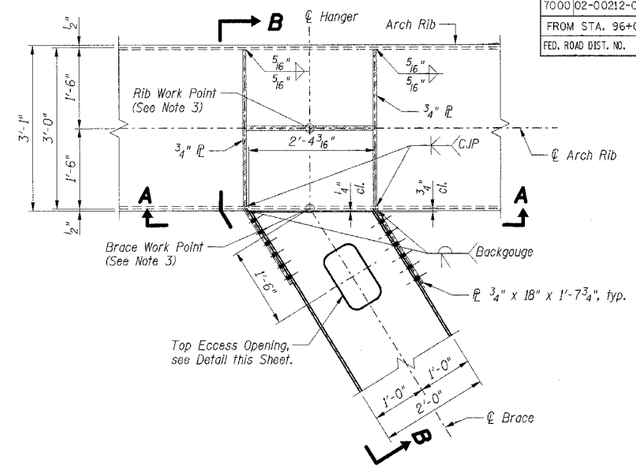

BRACE TO ARCH RIB CONNECTION

Hanger not shown for clarity

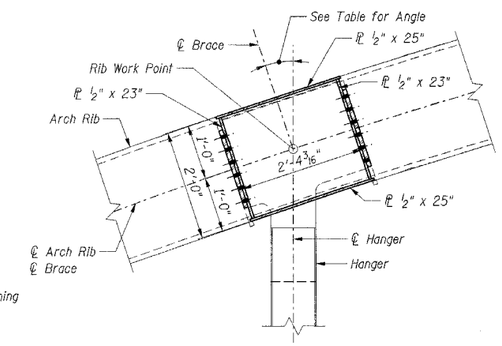

Work Point	Angle East Arch Rib	Angle West Arch Rib
R-2	18.2632°	18.1322°
R-3	6.0356°	5.8678°
R-4	6.8715°	7.0674°
R-5	19.2086°	19.4205°

SECTION A-A

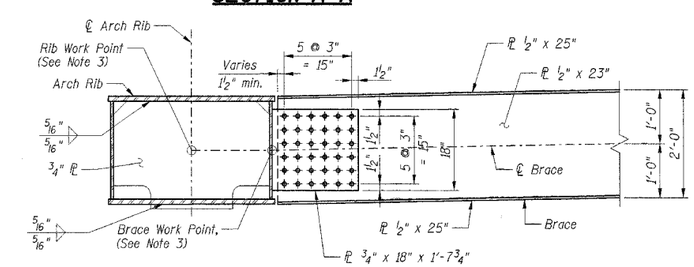

SECTION B-B

Notes:

1. Fasteners for Splices and Arch Rib to Brace connections shall be 7/8" ϕ AASHTO M 164 high-strength bolts in 15/16" ϕ holes.
2. All structural steel shall be AASHTO M 270 Grade 50W.
3. Brace Work Point Elevation corresponds to adjacent Rib Work Point at each location. For Rib Work Elevation see Sht. S-18.

SHT. S-27 OF 40

REVISIONS NAME	DATE

CITY OF DANVILLE, ILLINOIS
HUNGRY HOLLOW ROAD BRIDGE

ARCH RIB DETAILS

SCALE:
DATE 12/06/05
DRAWN BY LAR
CHECKED BY JRH

TENG

TENG & ASSOCIATES, INC.
ENGINEERS ARCHITECTS PLANNERS
205 N. MICHIGAN AVE. CHICAGO, IL 60601
TELEPHONE 312/616-1500

..\TB00079.DGN,..\SUD00P86.DGN,..\SUD00P86.DGN,..\SUD00P86.DGN
12-07-2005,13:26:38
S:\DOCUMENT\02336902\STRUCT\DGN\SUD00P86.DGN
ROSSPF