FAU RTE	SECTION	COUNTY	TOTAL SHEETS	SHEET NO.
7000	02-00212-00-BR	VERMILION	59	51
FROM STA. 96+00.00		TO STA. 103+10.10		
FED. ROAD DIST. NO.	ILLINOIS	FED. AID PROJECT		

CONTRACT NO. 59285

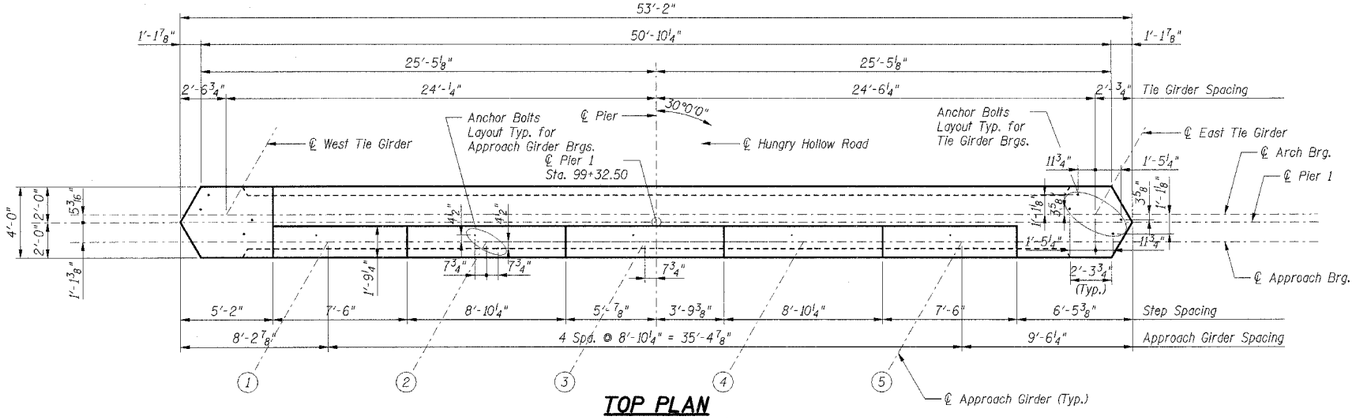

TOP PLAN

Bearing Seat Elevations

Approach Girder	Elevation
1	551.41
2	551.51
3	551.60
4	551.39
5	551.19

Bearing Seat Elevations

Tie Girder	Elevation
West	550.67
East	550.14

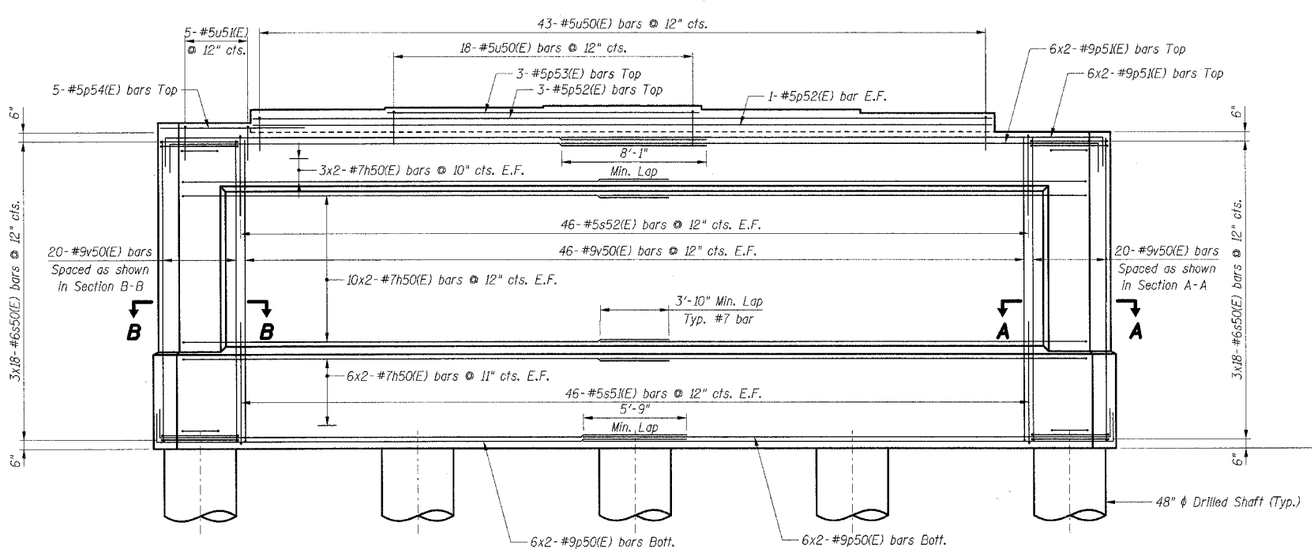

ELEVATION

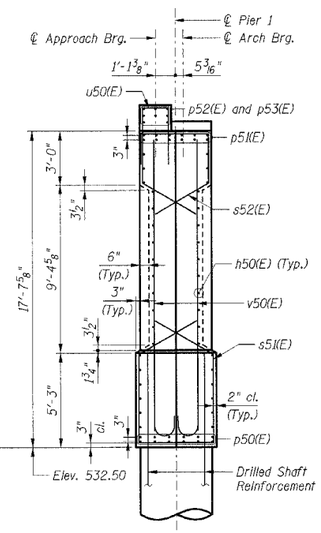

END VIEW

(Looking West)

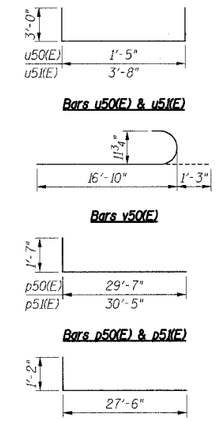

BAR LIST

Bar	No.	Size	Length	Shape
h50(E)	76	#7	28'-8"	
p50(E)	24	#9	31'-2"	
p51(E)	24	#9	32'-0"	
p52(E)	5	#5	41'-2"	
p53(E)	3	#5	17'-4"	
p54(E)	5	#5	9'-6"	
s50(E)	108	#6	12'-11"	
s51(E)	46	#5	20'-10"	
s52(E)	46	#5	15'-10"	
u50(E)	61	#5	7'-5"	
u51(E)	5	#5	8'-2"	
v50(E)	132	#9	18'-1"	

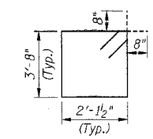

Bar s50(E)

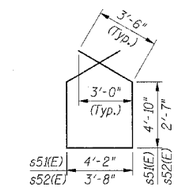

Bars s51(E) & s52(E)

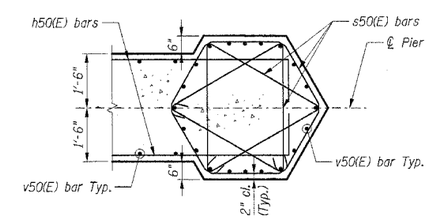

SECTION A-A

(Section B-B Similar - Opposite Hand)

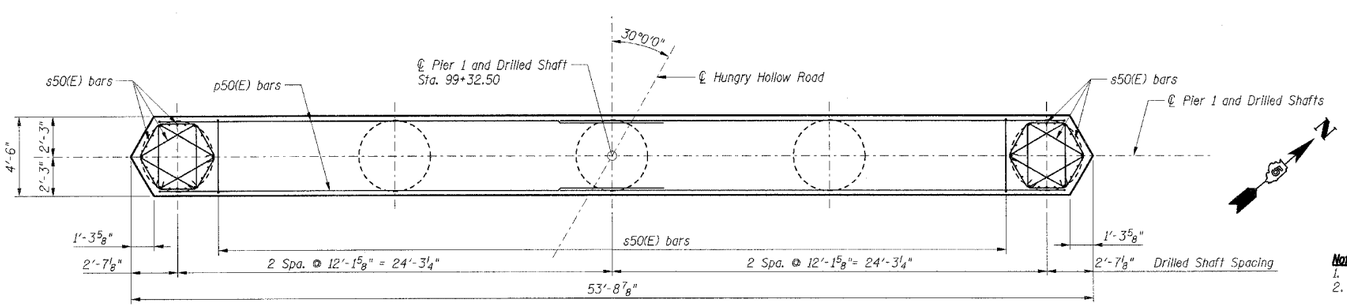

DRILL SHAFT CAP PLAN

BILL OF MATERIALS

Item	Unit	Total
Structure Excavation	Cu Yd	2
Concrete Structures	Cu Yd	129.5
Reinforcement Bars, Epoxy Coated	Lbs	22,410
Bridge Seat Sealer	Sq Yd	23

Notes:

1. Reinforcement Bars designated (E) shall be epoxy coated.
2. Bars indicated thus: 4x2-#5 etc. indicate 4 lines of bars with 2 lengths per line.
3. Space reinforcement in pier to miss anchor bolts.
4. All edges shall have standard ¾" chambers except as noted.
5. Pour steps montolithically with pier cap.
6. E.F. indicates Each Face.
7. For drilled shaft details, see Sht. S-06.

SHT. S-36 OF 40

REVISIONS	
NAME	DATE

CITY OF DANVILLE, ILLINOIS
HUNGRY HOLLOW ROAD BRIDGE

PIER 1

SCALE:
DATE 12/06/05
DRAWN BY TMH
CHECKED BY JRH

TENG

TENG & ASSOCIATES, INC.
ENGINEERS ARCHITECTS PLANNERS
303 N. MICHIGAN AVE. CHICAGO, IL 60601
TELEPHONE: 312/616-0600

..\SBLOOP70.DGN, ..\FRROOP5Y.DGN, ..\ALTOOP83.DGN, ..\BMEOOP8L.DGN, ..\DKPOOP5J.DGN, ..\GPEOOP7X.DGN, ..\GCNOOPFG.DGN, ..\TTB00073.DGN, ..\PROGPRA.DGN, ..\PROOPRA.DGN, ..\PROOP5L.DGN
ROSSPF
12-07-2005, 13:29
S:\DOCUMENT\02336902\STRUCTUGN\PROOPRA.DGN