1-20-06 Letting, Item 82

F.A.U. RTE.	SECTION	COUNTY	TOTAL SHEETS	SHEET NO.
7000	02-00212-00-BR	VERMILION	59	1
STA. 96+00.00		TO STA. 103+10.10		
FED. ROAD DIST. NO.	ILLINOIS	FED. AID PROJECT		

CONTRACT NO: 91285

FOR INDEX OF SHEETS AND LIST OF STANDARDS, SEE SHEET 2

STATE OF ILLINOIS
DEPARTMENT OF TRANSPORTATION
DIVISION OF HIGHWAYS

PLANS FOR PROPOSED

FEDERAL AID PROJECT
FAU ROUTE 7000
(HUNGRY HOLLOW ROAD OVER THE NORTH BRANCH BIG VERMILION RIVER)

SECTION: 02–00212–00–BR
PROJECT: BRM–5016 (31)
PROJECT LOCATION: HUNGRY HOLLOW ROAD FROM WILLIAMS STREET TO HAMPTON ROAD
BRIDGE REPLACEMENT AND PAVEMENT RECONSTRUCTION
CITY OF DANVILLE
VERMILION COUNTY
C–95–025–03

DESCRIPTION OF IMPROVEMENT
THIS IMPROVEMENT CONSISTS OF REPLACING THE HUNGRY HOLLOW ROAD BRIDGE OVER THE NORTH FORK OF THE BIG VERMILION RIVER, INCLUDING ASSOCIATED ROADWAY WIDENING AND GRADING.

DESIGN DESIGNATION: MINOR ARTERIAL
TRAFFIC DATA: 2003 ADT = 3,300; 2026 ADT = 3,700
POSTED SPEED: 30 MPH

SCALES:
PLAN 1″=50′ (OR 1″=20′)
PROFILE HORIZ. 1″=50′ (OR 1″=20′)
PROFILE VERT. 1″=5′ (OR 1″=2′)
CROSS SECTION HORIZ 1″=10′
CROSS SECTION VERT. 1″=5′

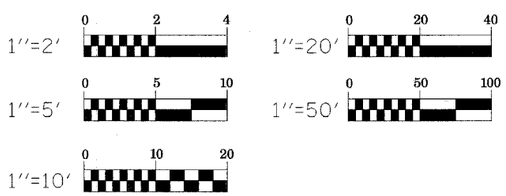

FULL SIZE PLANS HAVE BEEN PREPARED USING STANDARD ENGINEERING SCALES, REDUCED SIZED PLANS WILL NOT CONFORM TO STANDARD SCALES, IN MAKING MEASUREMENTS ON REDUCED PLANS, THE ABOVE SCALES MAY BE USED.

FOR UNDERGROUND UTILITY LOCATIONS, CALL J.U.L.I.E. 1–800–892–0123 TOLL FREE

CONTRACT NO. 91285

T19N R11W SECTION 6
DANVILLE TOWNSHIP

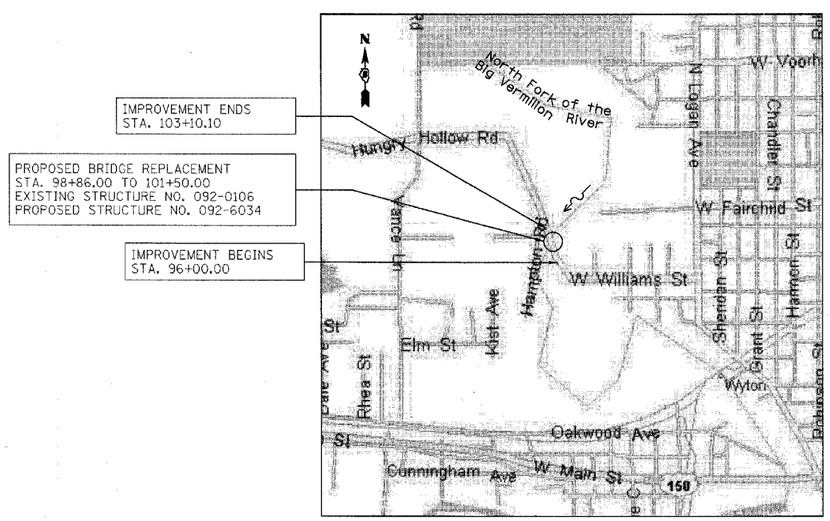

LOCATION MAP
1″ = 1/4 MILE

GROSS LENGTH OF IMPROVEMENT = 710 FEET
NET LENGTH OF IMPROVEMENT = 710 FEET
(264 FEET BRIDGE)

LOCATION OF SECTION INDICATED THUS:–

APPROVED R. David Schnelle **20** 05
11/09/2005
CITY OF DANVILLE ENGINEER

PASSED 11/9 **20** 05
DISTRICT FIVE ENGINEER OF LOCAL ROADS AND STREETS

RELEASING FOR BID BASED ON LIMITED REVIEW 11/10 **20** 05
DEPUTY DIRECTOR OF HIGHWAYS, REGION THREE ENGINEER

STATE OF ILLINOIS
DEPARTMENT OF TRANSPORTATION

RYAN T. DANLEY 062-044058 LICENSED PROFESSIONAL ENGINEER OF ILLINOIS
11/3/05
EXPIRES 11/30/05

STRUCTURAL ENGINEER OF ILLINOIS
11/3/05
EXPIRES 11/30/06

PRINTED BY THE AUTHORITY OF THE STATE OF ILLINOIS

TENG

TENG & ASSOCIATES, INC.
ENGINEERS/ARCHITECTS/PLANNERS
205 N. MICHIGAN AVE.
CHICAGO, IL 60601
TELEPHONE: 312/616-0000

FEDERAL AID ENGINEER -- TBD (217) XXX-XXXX
CONSULTANT: TENG AND ASSOCIATES, INC. (312) 616-0000

FAU RTE	SECTION	COUNTY	TOTAL SHEETS	SHEET NO.
7000	02-00212-00-BR	VERMILION	59	2
FROM STA. 96+00.00		TO STA. 103+10.10		
FED. ROAD DIST. NO.	ILLINOIS	FED. AID PROJECT		

CONTRACT NO. 91285

INDEX OF DRAWINGS

DRAWING NO.	DESCRIPTION
1	COVER SHEET
2	GENERAL NOTES & INDEX OF DRAWINGS
3	ALIGNMENT, TIES & BENCHMARKS
4-6	SUMMARY OF QUANTITIES
7	TYPICAL SECTIONS
8-9	SCHEDULE OF QUANTITIES
10	DETOUR MAP
11	ROADWAY AND DRAINAGE REMOVAL PLAN
12	ROADWAY PLAN & PROFILE
13	PAVEMENT MARKING & LANDSCAPING
14	DRAINAGE PLAN & DETAILS
15	EROSION CONTROL PLAN
16	GENERAL PLAN & ELEVATION
17	BRIDGE CROSS SECTIONS
18	GENERAL NOTES, INDEX OF SHEETS & TOTAL BILL OF MATERIALS
19	ERECTION SCHEMATICS - I
20	ERECTION SCHEMATICS - II
21	SUBSTRUCTURE LAYOUT & DRILLED SHAFT DETAILS
22	TOP OF DECK ELEVATIONS APPROACH SPANS
23	TOP OF DECK ELEVATIONS MAIN SPAN - I
24	TOP OF DECK ELEVATIONS MAIN SPAN - II
25	DECK PLAN & CROSS SECTION APPROACH SPANS
26	DECK PLAN & CROSS SECTION MAIN SPAN
27	PARAPET ELEVATIONS & DETAILS APPROACH SPANS
28	PARAPET ELEVATIONS & DETAILS MAIN SPAN
29	EXPANSION JOINT DETAILS
30	STRUCTURAL STEEL FRAMING PLAN & DETAILS APPROACH SPANS
31	STRUCTURAL STEEL FRAMING PLAN & DETAILS MAIN SPAN
32	ARCH RIB ELEVATION & GEOMETRY - I
33	ARCH RIB ELEVATION & GEOMETRY - II
34	TIE GIRDER ELEVATION
35	TIE GIRDER SPLICE DETAILS
36	TIE GIRDER DETAILS - I
37	TIE GIRDER DETAILS - II
38	TRANSVERSE FLOOR BEAM ELEVATIONS
39	TRANSVERSE FLOOR BEAM CONNECTION DETAILS
40	LONGITUDINAL STRINGER ELEVATIONS
41	FLOOR SYSTEM LATERAL BRACING DETAILS
42	ARCH RIB DETAILS
43	HANGER DETAILS
44	BEARING DETAILS APPROACH SPANS
45	BEARING DETAILS MAIN SPAN
46	ANCHOR BOLT DETAILS
47	SOUTH ABUTMENT PLAN, ELEVATION & SECTION
48	NORTH ABUTMENT PLAN, ELEVATION & SECTION
49	ABUTMENT DIAPHRAGM ELEVATION & SECTION
50	APPROACH SLAB PLAN & DETAILS
51	PIER 1
52	PIER 2
53	BAR SPLICER DETAILS
54	SOIL BORING LOG - I
55	SOIL BORING LOG - II
56-59	CROSS SECTIONS

STATE STANDARDS

NUMBER	DESCRIPTION
280001-02	TEMPORARY EROSION CONTROL SYSTEMS
542001	REINFORCED CONCRETE END SECTIONS WITH PARALLEL WINGWALLS FOR PIPE CULVERTS
602001	CATCH BASIN TYPE A
602306	INLET - TYPE B
604091-01	FRAME AND GRATE TYPE 24
630001-05	STEEL PLATE BEAM GUARDRAIL
630301-03	SHOULDER WIDENING FOR TYPE 1 (SPECIAL) GUARDRAIL TERMINALS
631031-05	TRAFFIC BARRIER TERMINAL, TYPE 6
635006-02	REFLECTOR AND TERMINAL MARKER PLACEMENT
635011-01	REFLECTOR MARKER AND MOUNTING DETAILS

GENERAL NOTES

1. ANY REFERENCE TO "STANDARD SPECIFICATIONS" THROUGHOUT THE PLANS OR SPECIAL PROVISIONS SHALL BE INTERPRETED TO BE THE ILLINOIS DEPARTMENT OF TRANSPORTATION STANDARD SPECIFICATIONS FOR ROAD AND BRIDGE CONSTRUCTION ADOPTED JANUARY 1, 2002 AND THE LATEST EDITION OF THE IDOT SUPPLEMENTAL SPECIFICATIONS AND RECURRING SPECIAL PROVISIONS.

2. BEFORE STARTING ANY EXCAVATION, GRADING OR BELOW GRADE WORK, THE CONTRACTOR SHALL CONTACT "J.U.L.I.E." AT 1-800-892-0123 FOR FIELD LOCATIONS OF BURIED ELECTRIC, TELEPHONE, WATER AND GAS FACILITIES FORTY-EIGHT (48) HOURS NOTIFICATION IS REQUIRED.

3. THE CONTRACTOR SHALL COORDINATE THE CONSTRUCTION ACTIVITIES WITH UTILITY COMPANIES AND CITY OF DANVILLE.

4. REMOVAL OF THE EXISITNG SIGNS THAT DELINIEATE THE EXISITNG GUARDRAIL SHALL BE INCLUDED IN THE UNIT COST FOR REMOVAL OF EXISITNG STRUCTURES.

5. INSTALLATION, OPERATION AND MAINTENANCE OF EROSION AND SEDIMENT CONTROL DETAILS SHALL BE IN ACCORDANCE WITH THE STANDARD SPECIFICATIONS, IDOT STANDARD DETAILS AND THE USDA NATURAL RESOURCE CONSERVATION SERVICE'S ILLINOIS URBAN MANUAL.

REVISIONS	
NAME	DATE

CITY OF DANVILLE, ILLINOIS
HUNGRY HOLLOW ROAD BRIDGE

GENERAL NOTES &
INDEX OF DRAWINGS

SCALE: NTS — DRAWN BY PFR
DATE: 12/06/05 — CHECKED BY JRH

TENG

TENG & ASSOCIATES, INC.
ENGINEERS/ARCHITECTS/PLANNERS
203 N. MICHIGAN AVE. CHICAGO, IL 60601
TELEPHONE: 312/616-0600

ROSSPF
S:\DOCUMENT\02336302\CIVIL\DGN\IDXOOPLV.DGN
..\T(BOOPM).DGN
12-07-2005,15:51:17

FAU RTE	SECTION	COUNTY	TOTAL SHEETS	SHEET NO.
7000	02-00212-00-BR	VERMILION	59	3
FROM STA. 96+00.00		TO STA. 103+10.10		
FED. ROAD DIST. NO.	ILLINOIS	FED. AID PROJECT		

CONTRACT NO. 91285

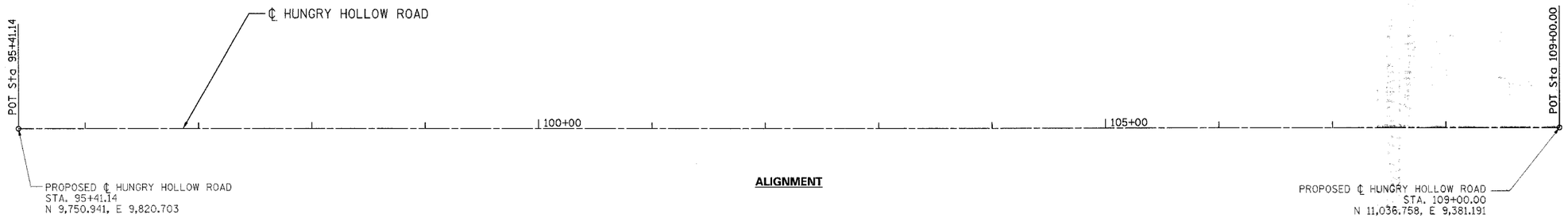

ALIGNMENT

NOTE:
LOCAL COORDINATE SYSTEM USED.

TIES

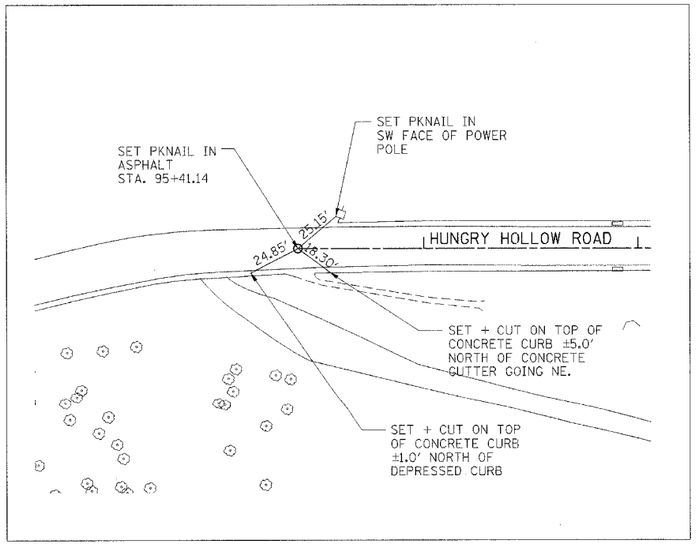

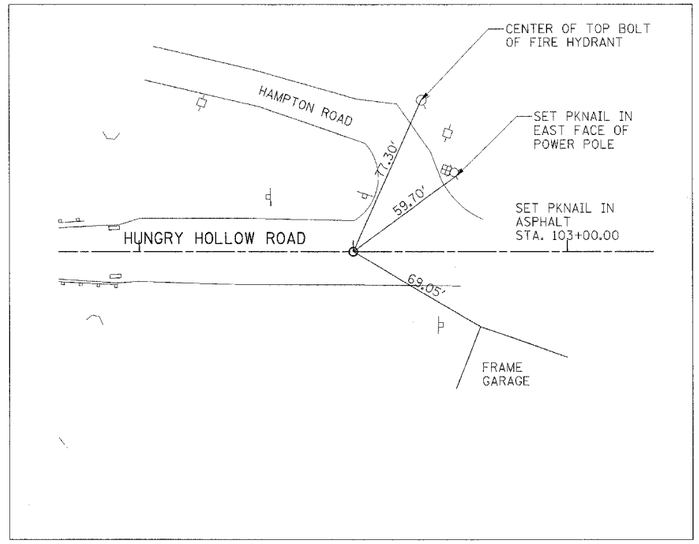

BENCHMARKS

BENCHMARK	DESCRIPTION
TBM#1	TOP OF RAILROAD SPIKE IN THE EAST FACE OF FIRST POLE SOUTH OF EXISTING HUNGRY HOLLOW ROAD BRIDGE OVER NORTH FORK OF VERMILLION RIVER IN DANVILLE, ILLINOIS. ELEV. 555.96
TBM#2	SQUARE CUT ON TOP OF NORTHEAST WINGWALL OF EXISTING HUNGRY HOLLOW ROAD BRIDGE OVER NORTH FORK OF VERMILLION RIVER IN DANVILLE, ILLINOIS. ELEV. 551.84
TBM#3	SQUARE CUT ON TOP OF CIRCULAR CONCRETE FOUNDATION OF LIFT STATION LOCATED ±50 FEET SW OF EDGE OF PAVEMENT OF HUNGRY HOLLOW ROAD AND ±800 FEET SOUTHERLY OF EXISTING HUNGRY HOLLOW ROAD BRIDGE OVER NORTH FORK OF VERMILLION RIVER IN DANVILLE, ILLINOIS. ELEV. 578.83

REVISIONS	
NAME	DATE

CITY OF DANVILLE, ILLINOIS
HUNGRY HOLLOW ROAD BRIDGE

ALIGNMENT, TIES & BENCHMARKS

SCALE: 1"=50'
DATE: 12/06/05
DRAWN BY MRK
CHECKED BY JRH

TENG

TENG & ASSOCIATES, INC.
ENGINEERS/ARCHITECTS/PLANNERS
205 N. MICHIGAN AVE. CHICAGO, IL 60601
TELEPHONE: 312/616-0600

...\ALT00P03.DGN, ...\TTB00PMD.DGN, ...\PMP00PC6.DGN, ...\TPX00P7.DGN
12-07-2005,13:53:16 S:\DOCUMENT\02336920\CIVIL\DGN\ALT00PM2.DGN
R05SPF

FAU RTE	SECTION	COUNTY	TOTAL SHEETS	SHEET NO.
7000	02-00212-00-BR	VERMILION	59	4
FROM STA. 96+00.00		TO STA. 103+10.10		
FED. ROAD DIST. NO.	ILLINOIS	FED. AID PROJECT		

CONTRACT NO. 91285

CODE NUMBER	ITEM	UNIT	TOTAL	STEEL ARCH BRIDGE OVER WATERWAY X044-2A	BITUMINOUS CONCRETE ROADWAY I000-2A
20100110	TREE REMOVAL (6 TO 15 UNITS DIAMETER)	UNIT	633		633
20100210	TREE REMOVAL (OVER 15 UNITS DIAMETER)	UNIT	453		453
20200100	EARTH EXCAVATION	CU YD	181		181
20201200	REMOVAL AND DISPOSAL OF UNSUITABLE MATERIAL	CU YD	411		411
20400800	FURNISHED EXCAVATION	CU YD	2881		2881
20700400	POROUS GRANULAR EMBANKMENT, SPECIAL	CU YD	178	178	
20800150	TRENCH BACKFILL	CU YD	55.6		55.6
21101615	TOPSOIL FURNISH AND PLACE, 4"	SQ YD	3051		3051
25000210	SEEDING, CLASS 2A	ACRE	0.03		0.03
25000300	SEEDING, CLASS 3	ACRE	0.6		0.6
25000400	NITROGEN FERTILIZER NUTRIENT	POUND	57		57
25000500	PHOSPHORUS FERTILIZER NUTRIENT	POUND	57		57
25000600	POTASSIUM FERTILIZER NUTRIENT	POUND	57		57
25100630	EROSION CONTROL BLANKET	SQ YD	3187		3187
28000300	TEMPORARY DITCH CHECKS	EACH	1		1
28000400	PERIMETER EROSION BARRIER	FOOT	1054		1054
28000500	INLET AND PIPE PROTECTION	EACH	8		8
28100105	STONE RIPRAP, CLASS A3	SQ YD	13		13
28100707	STONE DUMPED RIPRAP, CLASS A4	SQ YD	1270	1270	
28200200	FILTER FABRIC	SQ YD	1270	1270	
35100700	AGGREGATE BASE COURSE, TYPE A 8"	SQ YD	1065		1065
42001165	BRIDGE APPROACH PAVEMENT	SQ YD	187	187	
44000100	PAVEMENT REMOVAL	SQ YD	1165		1165
44000400	GUTTER REMOVAL	FOOT	50		50
44000500	COMBINATION CURB AND GUTTER REMOVAL	FOOT	568		568
48101800	AGGREGATE SHOULDERS (SPECIAL)	SQ YD	165		165
48202400	BITUMINOUS SHOULDERS SUPERPAVE 6"	SQ YD	157		157
50100200	REMOVAL OF EXISTING STRUCTURES	L SUM	1	1	
50200100	STRUCTURE EXCAVATION	CU YD	299	299	
50300100	FLOOR DRAINS	EACH	22	22	
50300225	CONCRETE STRUCTURES	CU YD	311.1	311.1	
50300255	CONCRETE SUPERSTRUCTURES	CU YD	320.5	320.5	
50300260	BRIDGE DECK GROOVING	SQ YD	1004	1004	
50300300	PROTECTIVE COAT	SQ YD	1004	1004	
50500105	FURNISHING AND ERECTING STRUCTURAL STEEL	L SUM	1	1	
50500505	STUD SHEAR CONNECTORS	EACH	6681	6681	

*SPECIALTY ITEM

REVISIONS	
NAME	DATE

CITY OF DANVILLE, ILLINOIS
HUNGRY HOLLOW ROAD BRIDGE

SUMMARY OF QUANTITIES I

SCALE: NTS — DRAWN BY PFR
DATE: >DATE — CHECKED BY JRH

TENG

TENG & ASSOCIATES, INC.
ENGINEERS•ARCHITECTS•PLANNERS
205 N. MICHIGAN AVE. CHICAGO, IL 60601
TELEPHONE: 312616-0600

R05SPF
..\TB00PMG.DGN,..\SU000PLW.DGN,..\SU000PLX.DGN
11-03-2005,16:43:31 S:\DOCUMENT\02236902\CIVIL\DGN\SU000PLX.DGN

FAU RTE	SECTION	COUNTY	TOTAL SHEETS	SHEET NO.
7000	02-00212-00-BR	VERMILION	59	5
FROM STA. 96+00.00		TO STA. 103+10.10		
FED. ROAD DIST. NO.	ILLINOIS	FED. AID PROJECT		

CONTRACT NO. 91285

	CODE NUMBER	ITEM	UNIT	TOTAL	STEEL ARCH BRIDGE OVER WATERWAY X044-2A	BITUMINOUS CONCRETE ROADWAY I000-2A
	50800105	REINFORCEMENT BARS	POUND	20320	20320	
	50800205	REINFORCEMENT BARS, EPOXY COATED	POUND	133980	133980	
	51201600	FURNISHING STEEL PILES HP12X53	FOOT	192	192	
	51202700	DRIVING STEEL PILES	FOOT	192	192	
	51203600	TEST PILE STEEL HP12X53	EACH	2	2	
	51204600	METAL SHOES	EACH	8	8	
	51500100	NAME PLATES	EACH	1	1	
	54200427	PIPE CULVERTS, TYPE 1 RCCP 12"	FOOT	193		193
	54213447	END SECTIONS 12"	EACH	4		4
	58700200	BRIDGE SEAT SEALER	SQ FT	46	46	
	59100100	GEOCOMPOSITE WALL DRAIN	SQ YD	94	94	
	60107600	PIPE UNDERDRAINS 4"	FOOT	164	164	
	60201340	CATCH BASINS, TYPE A, 4'-DIAMETER, TYPE 24 FRAME AND GRATE	EACH	4		4
	60240328	INLETS, TYPE B, TYPE 24 FRAME AND GRATE	EACH	4		4
	60500050	REMOVING CATCH BASINS	EACH	1		1
	60500060	REMOVING INLETS	EACH	6		6
	60602200	CONCRETE GUTTER	FOOT	22		22
	60605000	COMBINATION CONCRETE CURB AND GUTTER, TYPE B-6.24	FOOT	652		652
*	63000000	STEEL PLATE BEAM GUARD RAIL, TYPE A	FOOT	325		325
*	63100085	TRAFFIC BARRIER TERMINAL, TYPE 6	EACH	4		4
*	63100167	TRAFFIC BARRIER TERMINAL TYPE 1, SPECIAL (TANGENT)	EACH	4		4
	63200310	GUARDRAIL REMOVAL	FOOT	118		118
	67100100	MOBILIZATION	L SUM	1		1
	70102550	TRAFFIC CONTROL AND PROTECTION FOR TEMPORARY DETOUR	EACH	1		1
*	78000200	THERMOPLASTIC PAVEMENT MARKING - LINE 4"	FOOT	886		886
*	78005110	EPOXY PAVEMENT MARKING - LINE 4"	FOOT	534		534
	78200405	GUARDRAIL MARKERS	EACH	16		16
	78200500	BARRIER WALL MARKERS	EACH	12		12
	78201000	TERMINAL MARKER - DIRECT APPLIED	EACH	4		4
	X0321501	WEED BARRIER FABRIC	SQ YD	165		165
	X0323341	BRIDGE EXPANSION JOINT SYSTEM	FOOT	80	80	
	X4066414	BITUMINOUS CONCRETE SURFACE COURSE, SUPERPAVE, MIX "C", N50	TON	89		89
	X4066614	BITUMINOUS CONCRETE BINDER COURSE, SUPERPAVE, IL-19.0, N50	TON	179		179
	XX006426	FLOATING BEARINGS, FIXED - 550K	EACH	1	1	
	XX006427	FLOATING BEARINGS, GUIDED EXPANSION, 550K	EACH	2	2	
	XX006428	FLOATING BEARINGS, NON-GUIDED EXPANSION (550 KIP)	EACH	1	1	
	XX003503	FLARED END SECTION REMOVAL	EACH	5		5

*SPECIALTY ITEM

REVISIONS	
NAME	DATE

CITY OF DANVILLE, ILLINOIS
HUNGRY HOLLOW ROAD BRIDGE

SUMMARY OF QUANTITIES II

SCALE: NTS — DRAWN BY PFR
DATE: >DATE — CHECKED BY JRH

TENG

TENG & ASSOCIATES, INC.
ENGINEERS•ARCHITECTS•PLANNERS
105 N. MICHIGAN AVE. CHICAGO, IL 60601
TELEPHONE: 312/616-0600

ROSSPF
..\TTE60PMOD.DGN,..\SU000PLN.DGN,..\SU000PMOD.DGN
S:\DOCUMENT\02336902\CIVIL\DGN\SU000PMOD.DGN
8-03-2005, 16:45:08

FAU RTE	SECTION	COUNTY	TOTAL SHEETS	SHEET NO.
7000	02-00212-00-BR	VERMILION	59	6
FROM STA. 96+00.00		TO STA. 103+10.10		
FED. ROAD DIST. NO.	ILLINOIS	FED. AID PROJECT		

CONTRACT NO. 91285

CODE NUMBER	ITEM	UNIT	TOTAL	STEEL ARCH BRIDGE OVER WATERWAY X044-2A	BITUMINOUS CONCRETE ROADWAY I000-2A
Z0008248	DRILLED SHAFT IN SOIL 48"	FOOT	54	54	
Z0008342	DRILLED SHAFT IN ROCK 42"	FOOT	105	105	

*SPECIALTY ITEM

REVISIONS	
NAME	DATE

CITY OF DANVILLE, ILLINOIS
HUNGRY HOLLOW ROAD BRIDGE

SUMMARY OF QUANTITIES III

SCALE: NTS
DATE: 12/06/05

DRAWN BY PFR
CHECKED BY JRH

TENG

TENG & ASSOCIATES, INC.
ENGINEERS/ARCHITECTS/PLANNERS
205 N. MICHIGAN AVE. CHICAGO, IL 60601
TELEPHONE: 312/616-0800

R9SSPF
..\TBG\OPND\IGN,..\SU000PLW.DGN,..\SU000PLW.DGN
12-06-2005,9:24:20 S:\DOCUMENT\02336902\CIVIL\DGN\SU000P_T.DGN

FAU RTE	SECTION	COUNTY	TOTAL SHEETS	SHEET NO.
7000	02-00212-00-BR	VERMILION	59	7
FROM STA. 96+00.00		TO STA. 103+10.10		
FED. ROAD DIST. NO.	ILLINOIS	FED. AID PROJECT		

CONTRACT NO. 91285

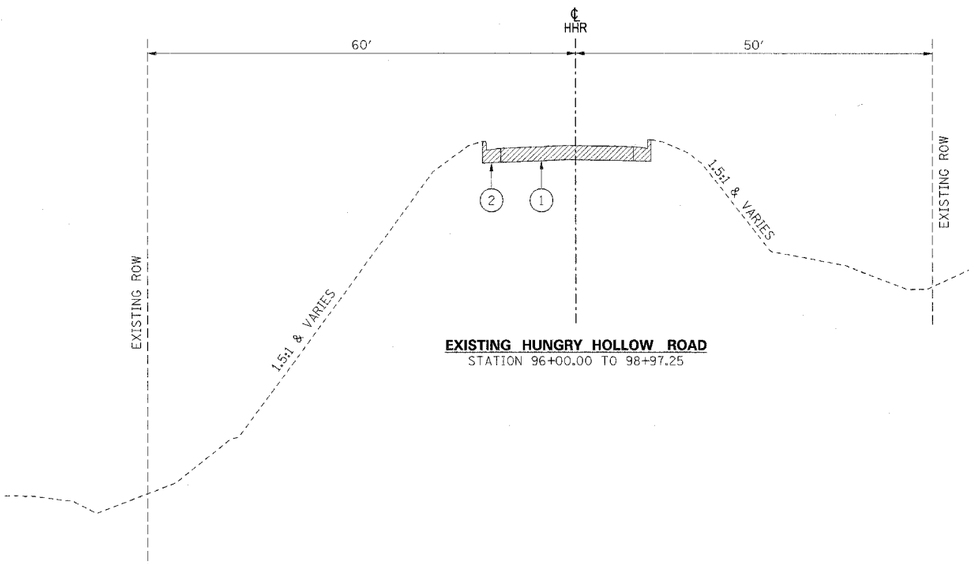

EXISTING HUNGRY HOLLOW ROAD
STATION 96+00.00 TO 98+97.25

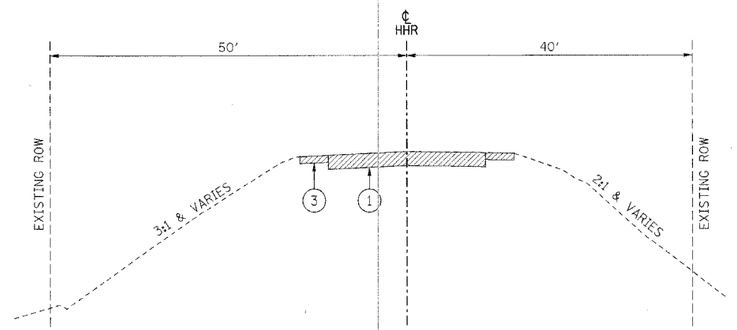

EXISTING HUNGRY HOLLOW ROAD
STATION 101+38.79 TO 103+10.10

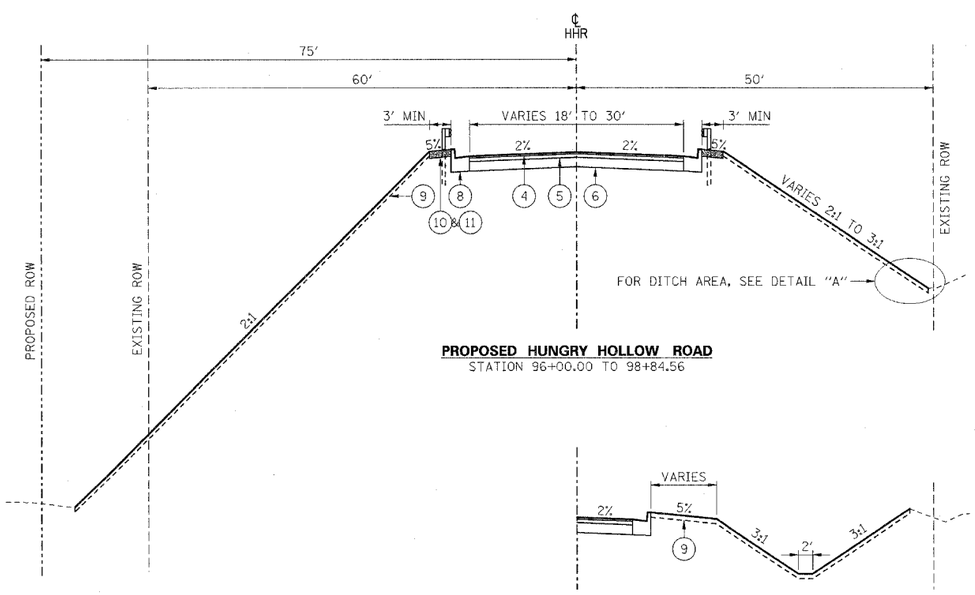

PROPOSED HUNGRY HOLLOW ROAD
STATION 96+00.00 TO 98+84.56

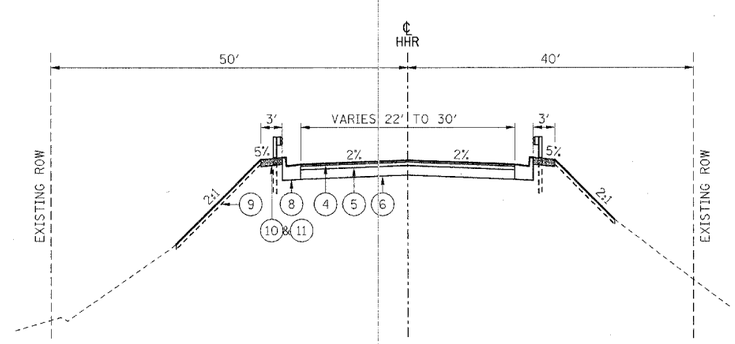

PROPOSED HUNGRY HOLLOW ROAD
STATION 101+51.44 TO 103+10.10
FOR SHOULDER AREAS (NO CURB & GUTTER) SEE DETAIL "B"

DETAIL "A"
STATION 96+00.00 RT TO 96+60.00 RT

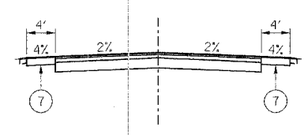

DETAIL "B"
STATION 102+48.38 LT TO 103+10.10 LT &
STATION 102+50.01 RT TO 103+10.10 RT

LEGEND

1. EXISTING PAVEMENT
2. EXISTING COMBINATION CONCRETE CURB & GUTTER
3. EXISTING COMBINATION CONCRETE CURB & GUTTER
4. BITUMINOUS CONCRETE SURFACE COURSE, SUPERPAVE, MIX "C", N50, 1.5"
5. BITUMINOUS CONCRETE BINDER COURSE, SUPERPAVE, IL-19, N50, 3.0"
6. AGGREGATE BASE COURSE, TYPE A, 8"
7. BITUMINOUS SHOULDERS, SUPERPAVE, 6"
8. COMBINATION CONCRETE CURB & GUTTER, TYPE B-6.24
9. TOPSOIL, FURNISH & PLACE, 4"
10. AGGREGATE SHOULDERS (SPECIAL), 6"
11. WEED BARRIER FABRIC

REMOVAL

NOTES

1. BRIDGE OMISSION FROM STATION 98+84.56 TO 101+51.44 SEE BRIDGE DRAWINGS FOR BRIDGE TYPICAL SECTIONS.
2. BITUMINOUS SHOULDER STABILIZATION AT TRAFFIC BARRIER TERMINALS, TYPE 1 (SPECIAL) , ARE NOT SHOWN ON THESE TYPICAL SECTIONS FOR CLARITY. PLEASE REFER TO ROADWAY PLANS FOR LOCATIONS.
3. WEED BARRIER FABRIC AND AGGREGATE SHOULDERS (SPECIAL) SHALL BE LOCATED BENEATH THE GUARDRAIL, AT A 3-FOOT WIDTH WHERE BITUMINOUS SHOULDER STABILIZATION IS NOT PRESENT. PLEASE SEE THE ROADWAY PLANS FOR SPECIFIC LOCATIONS.
4. BETWEEN STATIONS 96+00 AND 97+87, THE WIDTH OF THE SHELVES BEHIND THE CURB AND GUTTER VARIES IN EXCESS OF 3 FEET. THIS IS TO ACCOMMODATE ANY FUTURE WIDENING OF HUNGRY HOLLOW ROAD TO THE SOUTH AND EAST.

PAVEMENT DESIGN

CLASS II ROADWAY
STRUCTURAL DESIGN TRAFFIC: YEAR 2016
PV: 3,374, SU: 109, MU: 18
E(r1): 2.0
DESIGN TEMPERATURE: 76.5°F
E(AC): 640
S(AC): 250

PAVEMENT:
1.5" BITUMINOUS CONCRETE SURFACE COURSE, SUPERPAVE, MIX "C", N50
3.0" BITUMINOUS CONCRETE BINDER COURSE, SUPERPAVE, IL-19, N50
8.0" AGGREGATE BASE, TYPE A

BITUMINOUS MIX REQUIREMENTS

MIXTURE USE	BINDER	SURFACE	BIT SHOULDERS
AC/PG	PG 64-22	PG 64-22	PG 58-22
RAP% (MAX)	25%	15%	30%
DESIGN AIR VOIDS	4.0% @ N(des)=50	4.0% @ N(des)=50	2.0% @ N(des)=50
MIX COMP (GRADATION)	IL 19.0	IL 9.5	BAM
FRICTION AGGREGATE	N/A	MIX C	N/A

REVISIONS	
NAME	DATE

CITY OF DANVILLE, ILLINOIS
HUNGRY HOLLOW ROAD BRIDGE

TYPICAL SECTIONS

SCALE: NTS — DRAWN BY MRK
DATE: 12/06/05 — CHECKED BY JRH

TENG

TENG & ASSOCIATES, INC.
ENGINEERS/ARCHITECTS/PLANNERS
205 N. MICHIGAN AVE. CHICAGO, IL 60601
TELEPHONE: 312/616-0000

ROSSPF
S:\DOCUMENT\02336902\CIVIL\DGN\TSC00PM02.DGN
..\TT00PM01.DGN
12-07-2005,15:56

FAU RTE	SECTION	COUNTY	TOTAL SHEETS	SHEET NO.
7000	02-00212-00-BR	VERMILION	59	8
FROM STA. 96+00.00		TO STA. 103+10.10		
FED. ROAD DIST. NO.	ILLINOIS	FED. AID PROJECT		

CONTRACT NO. 91285

20100110 TREE REMOVAL (6 TO 15 UNITS DIA.) TOTAL 633

STATION	OFFSET	SIDE (FT)	DIAMETER (INCHES)	UNITS		STATION	OFFSET	SIDE (FT)	DIAMETER (INCHES)	UNITS
95+89	33	LT	8	8		96+09	46	RT	9	9
95+98	34	LT	11	11		96+19	46	RT	7	7
96+06	34	LT	8	8		96+20	30	RT	11	11
96+12	48	LT	8	8		96+30	46	RT	7	7
96+36	46	LT	11	11		96+40	46	RT	9	9
96+57	38	LT	11	11		96+41	22	RT	8	8
96+69	38	LT	11	11		96+48	22	RT	9	9
96+91	49	LT	8	8		96+58	22	RT	9	9
97+00	52	LT	8	8		96+68	35	RT	15	15
97+12	46	LT	13	13		96+80	35	RT	8	8
97+16	36	LT	10	10		96+90	35	RT	12	12
97+20	51	LT	15	15		97+03	35	RT	12	12
97+22	43	LT	10	10		97+17	33	RT	15	15
97+28	36	LT	10	10		97+43	26	RT	10	10
97+35	44	LT	10	10		97+50	37	RT	10	10
97+40	36	LT	8	8		97+68	25	RT	10	10
97+53	36	LT	6	6		98+02	23	RT	6	6
97+64	36	LT	8	8		98+22	41	RT	15	15
97+76	37	LT	8	8		98+52	45	RT	10	10
97+80	50	LT	8	8		98+57	32	RT	10	10
97+89	50	LT	8	8		98+80	39	RT	11	11
98+00	45	LT	13	13		98+89	35	RT	8	8
98+08	36	LT	11	11		99+02	37	RT	8	8
98+10	48	LT	14	14		99+20	32	RT	10	10
98+54	35	LT	6	6		99+24	42	RT	10	10
100+75	46	LT	8	8		99+31	36	RT	10	10
100+83	28	LT	8	8		99+32	43	RT	10	10
100+87	20	LT	15	15		101+36	23	RT	8	8
100+99	20	LT	11	11		101+48	27	RT	8	8
101+02	30	LT	8	8		101+63	31	RT	6	6
101+05	16	LT	8	8		101+80	36	RT	6	6
101+08	23	LT	8	8		101+91	29	RT	6	6
101+18	16	LT	8	8						
101+18	28	LT	8	8						
101+24	21	LT	6	6						

20100210 TREE REMOVAL (OVER 15 UNITS DIA.) TOTAL 453

STATION	OFFSET	SIDE (FT)	DIAMETER (INCHES)		UNITS
95+84	48	LT	24		24
96+42	54	LT	19		19
96+50	56	LT	38		38
96+72	47	LT	31		31
96+81	52	LT	19		19
97+28	50	LT	38		38
97+97	53	LT	42		42
98+20	36	LT	17		17
98+42	35	LT	19		19
98+70	36	LT	19		19
100+79	37	LT	18		18
100+79	21	LT	19		19
96+34	21	RT	22		22
97+24	24	RT	16		16
97+36	48	RT	16		16
97+62	37	RT	19		19
97+83	37	RT	19		19
97+88	24	RT	19		19
98+71	39	RT	20		20
101+23	25	RT	19		19

44000100 PAVEMENT REMOVAL TOTAL 1165

FROM STATION	WIDTH (FEET)	TO STATION	WIDTH (FEET)	AVERAGE WIDTH (FEET)	SQ YD
96+00.00	18.00	98+80.81	19.39	18.70	583
98+80.81	19.39	98+87.28	20.42	19.91	14
98+87.28	20.42	98+90.60	22.87	21.65	8
98+90.60	22.87	99+03.59	0.00	11.44	17
101+32.44	0.00	101+45.87	22.89	11.45	17
101+45.87	22.89	101+89.43	26.95	24.92	121
101+89.43	26.95	101+99.97	29.33	28.14	33
101+99.97	29.33	102+48.43	30.98	30.16	162
102+48.43	30.98	103+00.40	29.98	30.48	176
103+00.40	29.98	103+10.10	33.48	31.73	34

NOTES:

1. REFER TO SHEET 14 FOR THE DRAINAGE STRUCTURE AND PIPE SCHEDULES.
2. TREE LOCATIONS BASED ON FIELD INSPECTION THE CONTRACTOR SHALL VERIFY THE LOCATION OF THE TREES TO BE REMOVED.

XX146400 STORM SEWER REMOVAL TOTAL 177

FROM STATION	OFFSET	SIDE	TO STATION	OFFSET	SIDE	FOOT
96+90.42	11.49	LT	96+90.46	9.88	RT	21.37
96+90.46	9.88	RT	96+96.04	34.31	RT	25.06
97+94.11	11.31	LT	97+94.16	9.69	RT	21.00
97+94.16	9.69	RT	98+08.82	36.77	RT	30.79
98+98.42	10.13	RT	98+97.61	31.97	RT	21.86
101+88.83	11.09	LT	101+79.71	48.54	LT	38.54
101+88.22	11.37	RT	101+86.95	30.00	RT	18.67

XX003503 FLARED END SECTION REMOVAL TOTAL 5

STATION	SIDE		EACH
96+96.04	RT		1
98+08.70	RT		1
98+97.61	RT		1
101+79.71	RT		1
101+86.68	RT		1

60500060 REMOVING INLETS TOTAL 6

STATION	OFFSET	SIDE		EACH
96+90.46	11.50	LT		1
96+90.42	9.88	RT		1
97+94.16	11.31	LT		1
97+94.11	9.94	RT		1
101+88.83	11.37	RT		1
101+88.22	11.09	LT		1

44000500 COMB. CURB AND GUTTER REMOVAL TOTAL 568

FROM STATION	TO STATION	SIDE		FOOT
96+00.00	98+87.28	LT		287.28
96+00.00	98+80.93	RT		280.93

63200310 GUARDRAIL REMOVAL TOTAL 118

FROM STATION	TO STATION	SIDE		FOOT
98+71.89	99+03.94	RT		32.05
101+31.77	101+74.20	LT		42.43
101+46.14	101+89.87	RT		43.73

60500050 REMOVING CATCH BASINS TOTAL 1

STATION	OFFSET	SIDE		EACH
98+98.42	10.34	RT		1

EARTHWORK

STATION RANGE	EARTH EXCAV. (CU YD)	ADJUSTED FOR SHRIKAGE (CU YD)	EMBANK-MENT (CU YD)	EARTH BALANCE WASTE (+) SHORT (-) (CU YD)	UNSUIT. MATERIAL EXCAV. (CU YD)	TOPSOIL FURNISH & PLACE (SQ YD)
TOTALS	180.5	135.4	3,015.9	-2,880.5	411.5	3,050.9
95+80.00 TO 96+00.00	8.1	6.1	73.9	-67.8	13.0	116.7
96+00.00 TO 97+00.00	53.7	40.3	929.6	-889.3	129.0	1,100.0
97+00.00 TO 98+00.00	43.5	32.6	1,032.4	-999.8	121.0	922.2
98+00.00 TO 98+94.53	55.1	41.3	884.0	-842.7	106.2	777.2
101+41.53 TO 102+00.00	10.8	8.1	52.5	-44.4	21.7	116.9
102+00.00 TO 103+00.00	9.3	7.0	43.5	-36.5	20.4	17.6
103+00.00 TO 103+10.10	0.0	0.0	0.0	0.0	0.2	0.3

Shrinkage Factor = 25%

Furnished Excavation Required = 2880.5 Cubic Yards

25100630 EROSION CONTROL BLANKET TOTAL 3187

FROM STATION	TO STATION	SIDE	MEASURED AREA (SQ FT)	SLOPE	ADJ. AREA (SQ FT)	SQ YD
95+80	98+75	LT	14,050	2:1	15,708	1745
95+85	96+20	RT	945	4:1	974	108
96+20	96+60	RT	1,225	FLAT	1,225	136
96+60	97+00	RT	1,410	3:1	1,486	165
97+00	98+00	RT	2,970	2.5:1	3,199	355
98+00	99+25	RT	2,550	2:1	2,851	317
101+30	103+00	LT	1,660	2:1	1,856	206
101+60	103+10	RT	1,250	2:1	1,398	155

28000400 PERIMETER EROSION BARRIER TOTAL 1054

FROM STATION	OFFSET	TO STATION	OFFSET	SIDE	FOOT
95+80.00	75.00	98+41.26	75.00	LT	261
98+41.26	75.00	98+74.50	17.42	LT	66
95+89.00	50.00	99+13.42	50.00	RT	324
99+13.42	50.00	98+94.61	17.42	RT	38
101+39.56	20.58	101+28.35	40.00	LT	22
101+28.35	40.00	103+10.10	40.00	LT	182
101+62.17	18.58	101+74.54	40.00	RT	25
101+74.54	40.00	103+10.10	40.00	RT	136

28000500 INLET AND PIPE PROTECTION TOTAL 8

STATION	SIDE	DRAINAGE STRUCTURE TYPE	EACH
96+20	LT	INLET	1
96+20	RT	CATCH BASIN	1
97+35	LT	INLET	1
97+35	RT	CATCH BASIN	1
98+42	LT	INLET	1
98+59	RT	CATCH BASIN	1
102+45	LT	CATCH BASIN	1
102+45	RT	INLET	1

28100105 STONE RIPRAP, CLASS A3 TOTAL 13

STATION	SIDE	LENGTH (FT)	AVERAGE WIDTH (FT)	AREA (SQ FT)	SQ YD
96+20	RT	10.00	3.00	30.00	3.33
97+35	RT	10.00	3.00	30.00	3.33
98+59	RT	10.00	3.00	30.00	3.33
102+45	LT	10.00	3.00	30.00	3.33

20800150 TRENCH BACKFILL TOTAL 55.6

PIPE I.D.	PIPE DIAMETER (INCH)	PIPE THICKNESS (INCH)	MAXIMUM RIM-INV (FEET)	TRENCH DEPTH (FEET)	TRENCH WIDTH (FEET)	TRENCH LENGTH (FEET)	CU YD
A	12	2	3.97	4.60	2.83	15.68	7.56
B	12	2	4.54	5.17	4.33	2.00	1.66
C	12	2	4.27	4.90	2.83	21.59	11.09
D	12	2	5.37	6.00	4.33	2.00	1.92
E	12	2	4.36	4.98	2.83	32.00	16.74
F	12	2	7.37	8.00	4.33	2.00	2.57
G	12	2	4.33	4.95	2.83	23.39	12.16
H	12	2	5.38	6.00	4.33	2.00	1.93

REVISIONS	
NAME	DATE

CITY OF DANVILLE, ILLINOIS
HUNGRY HOLLOW ROAD BRIDGE

SCHEDULE OF QUANTITIES I

SCALE: NTS — DRAWN BY PFR

DATE: 12/06/05 — CHECKED BY JRH

TENG

TENG & ASSOCIATES, INC.
ENGINEERS/ARCHITECTS/PLANNERS
205 N. MICHIGAN AVE. CHICAGO, IL 60601
TELEPHONE: 312/616-0000

ROSSPF
\\TTBGPMDD\DGN\TSU0000PLW.DGN
12-07-2005 2:05:52 PM
S:\DOCUMENT\02236302\CIVIL\DGNS\SCHDUMPM000.DGN

FAU RTE	SECTION	COUNTY	TOTAL SHEETS	SHEET NO.
7000	02-00212-00-BR	VERMILION	59	9
FROM STA. 96+00.00		TO STA. 103+10.10		
FED. ROAD DIST. NO.	ILLINOIS	FED. AID PROJECT		

CONTRACT NO. 91285

X4066414 BITUMINOUS CONCRETE SURFACE COURSE, SUPERPAVE, MIX "C", N50 TOTAL 89

FROM STATION	WIDTH	TO STATION	WIDTH		TON
96+00.00	18.00	96+67.08	20.00		12
96+67.08	20.00	98+16.77	30.00		35
98+16.77	30.00	98+45.90	30.00		8
98+45.90	30.00	98+63.22	0.00		2
101+72.78	0.00	101+90.10	30.00		2
101+90.10	30.00	102+94.40	23.00		26
102+94.40	23.00	103+10.10	29.33		4

PAVEMENT DEPTH: 1.5 INCHES
DENSITY: 112 LBS/SY/IN

X4066616 BITUMINOUS CONCRETE BINDER COURSE, SUPERPAVE, IL-19.0, N70 TOTAL 179

FROM STATION	WIDTH	TO STATION	WIDTH		TON
96+00.00	18.00	96+67.08	20.00		24
96+67.08	20.00	98+16.77	30.00		70
98+16.77	30.00	98+45.90	30.00		16
98+45.90	30.00	98+63.22	0.00		5
101+72.78	0.00	101+90.10	30.00		5
101+90.10	30.00	102+94.40	23.00		52
102+94.40	23.00	103+10.10	29.33		8

PAVEMENT DEPTH: 3.0 INCHES
DENSITY: 112 LBS/SY/IN

35100700 AGGREGATE BASE COURSE, TYPE A 8" TOTAL 1065

FROM STATION	WIDTH	TO STATION (FT)	WIDTH		SQ YD
96+00.00	18.00	96+67.08	20.00		142
96+67.08	20.00	98+16.77	30.00		416
98+16.77	30.00	98+45.90	30.00		97
98+45.90	30.00	98+63.22	0.00		29
101+72.78	0.00	101+90.10	30.00		29
101+90.10	30.00	102+94.40	23.00		307
102+94.40	23.00	103+10.10	29.33		46

48202400 BITUMINOUS SHOULDERS SUPERPAVE 6" TOTAL 157

FROM STATION	WIDTH (FEET)	TO STATION	WIDTH (FEET)	SIDE (FEET)	SQ YD
96+09.49	0.0	96+33.49	4.0	LT	5.3
96+33.49	4.0	96+68.49	4.0	LT	15.6
96+68.49	4.0	96+92.49	0.0	LT	5.3
96+02.97	0.0	96+26.97	4.0	RT	5.3
96+26.97	4.0	96+61.97	4.0	RT	15.6
96+61.97	4.0	96+85.97	0.0	RT	5.3
101+73.88	0.0	101+97.88	4.0	LT	5.3
101+97.88	4.0	102+32.88	4.0	LT	15.6
102+32.88	4.0	102+48.38	2.0	LT	5.2
101+93.51	0.0	102+17.51	4.0	RT	5.3
102+17.51	4.0	102+52.51	4.0	RT	15.6
102+52.51	4.0	102+68.01	2.0	RT	5.2
102+50.38	4.0	103+10.10	4.0	LT	26.5
102+52.01	4.0	103+10.10	4.0	RT	25.8

60605000 COMB CONC C&G, TYPE B-6.24 TOTAL 652

FROM STATION	WIDTH (FEET)	TO STATION	WIDTH (FEET)	AVERAGE WIDTH (FEET)	FOOT
96+00.00	10.22	96+67.08	10.01	LT	67.1
96+67.08	10.01	98+16.77	15.00	LT	149.8
98+16.77	15.00	98+45.90	15.00	LT	29.1
96+00.00	7.78	98+16.77	15.00	RT	216.9
98+16.77	15.00	98+63.22	15.00	RT	46.4
101+72.78	15.00	101+90.10	15.00	LT	17.3
101+90.10	15.00	102+46.25	13.13	LT	56.2
102+46.25	13.13	102+50.38	16.99	LT	5.7
101+90.10	15.00	102+47.88	13.07	RT	57.8
102+47.88	13.07	102+52.01	16.94	RT	5.7

63000000 STEEL PLATE BEAM GUARDRAIL, TYPE A TOTAL 325

FROM STATION	TO STATION	SIDE		FOOT
96+93.49	98+43.49	LT		150
96+86.97	98+61.97	RT		175

663100167 TBT, TYPE 1 SPECIAL (TANGENT) TOTAL 4

FROM STATION	TO STATION	SIDE	LENGTH (FEET)		EACH
96+36.49	96+86.49	LT	50.00		1
96+36.97	96+86.97	RT	50.00		1
101+72.88	102+22.88	LT	50.00		1
101+74.51	102+24.51	RT	50.00		1

63100085 TRAFFIC BARRIER TERMINAL, TYPE 6 TOTAL 4

FROM STATION	TO STATION	SIDE	LENGTH (FEET)		EACH
98+43.49	98+74.74	LT	31.25		1
98+61.97	98+93.22	RT	31.25		1
101+41.63	101+72.88	LT	31.25		1
101+61.59	101+92.84	RT	31.25		1

PAVEMENT MARKINGS TOTAL 886 554

FROM STATION	TO STATION	TYPE	THERMO-PLASTIC 78000200 (FOOT)	EPOXY 78005110 (FOOT)
96+00.00	98+84.56	DOUBLE YELLOW	569	
98+84.56	101+51.44	DOUBLE YELLOW		554
101+51.44	103+10.10	DOUBLE YELLOW	317	

25000210 SEEDING, CLASS 2A TOTAL 0.03

FROM STATION	TO STATION	SIDE	MEASURED AREA (SQ FT)	ACRE
96+00.00	97+87.00	RT	560	0.013
96+00.00	97+87.00	LT	660	0.015

25000300 SEEDING, CLASS 3 TOTAL 0.6

FROM STATION	TO STATION	SIDE	MEASURED AREA (SQ FT)	ACRE
95+90.00	99+03.00	RT	8514.80	0.195
95+80.00	98+60.00	LT	13608.00	0.312
101+68.50	103.10.10	RT	1287.50	0.030
101+34.50	103+00.00	LT	1659.60	0.038

FERTILIZER NUTRIENT TOTALS 57 57 57

TYPE	AREA (SQ FT)	NITROGEN 28000400 (LBS)	PHOS-PHORUS 28000500 (LBS)	POTASSIUM 28000600 (LBS)
SEEDING, CLASS 2A	0.03	2.7	2.7	2.7
SEEDING, CLASS 3	0.6	54	54	54

48101800 AGGREGATE SHOULDERS (SPECIAL) TOTAL 165

FROM STATION	SIDE	WIDTH	TO STATION	SIDE	WIDTH	FOOT
96+74.24	LT	0.00	96+92.49	LT	3.00	3.0
96+92.49	LT	3.00	98+74.50	LT	3.00	60.7
96+67.97	RT	0.00	96+85.97	RT	3.00	3.0
96+85.97	RT	3.00	98+94.71	RT	3.00	69.6
101+39.56	LT	3.00	101+73.88	LT	3.00	11.4
101+73.88	LT	3.00	101+93.12	LT	0.00	3.2
101+61.59	RT	3.00	101+93.51	RT	3.00	10.6
101+93.51	RT	3.00	102+11.51	RT	0.00	3.0

THESE QUANTITIES ALSO APPLY TO X0321501 WEED BARRIER FABRIC

REVISIONS	
NAME	DATE

CITY OF DANVILLE, ILLINOIS
HUNGRY HOLLOW ROAD BRIDGE

SCHEDULE OF QUANTITIES II

SCALE: NTS — DRAWN BY PFR
DATE: 12/06/05 — CHECKED BY JRH

TENG
TENG & ASSOCIATES, INC.
ENGINEERS/ARCHITECTS/PLANNERS
205 N. MICHIGAN AVE. CHICAGO, IL 60601
TELEPHONE: 312/616-0000

ROSSPF
..\TTB06FWD.DGN, ..\SUD00PLW.DGN
12-07-2005, 13:43:11 S:\DOCUMENT\02336302\CIVIL\DGN\SC000P_S.DGN

FAU RTE	SECTION	COUNTY	TOTAL SHEETS	SHEET NO.
7000	02-00212-00-BR	VERMILION	59	10
FROM STA. 96+00.00		TO STA. 103+10.10		
FED. ROAD DIST. NO.	ILLINOIS	FED. AID PROJECT		

CONTRACT NO. 91285

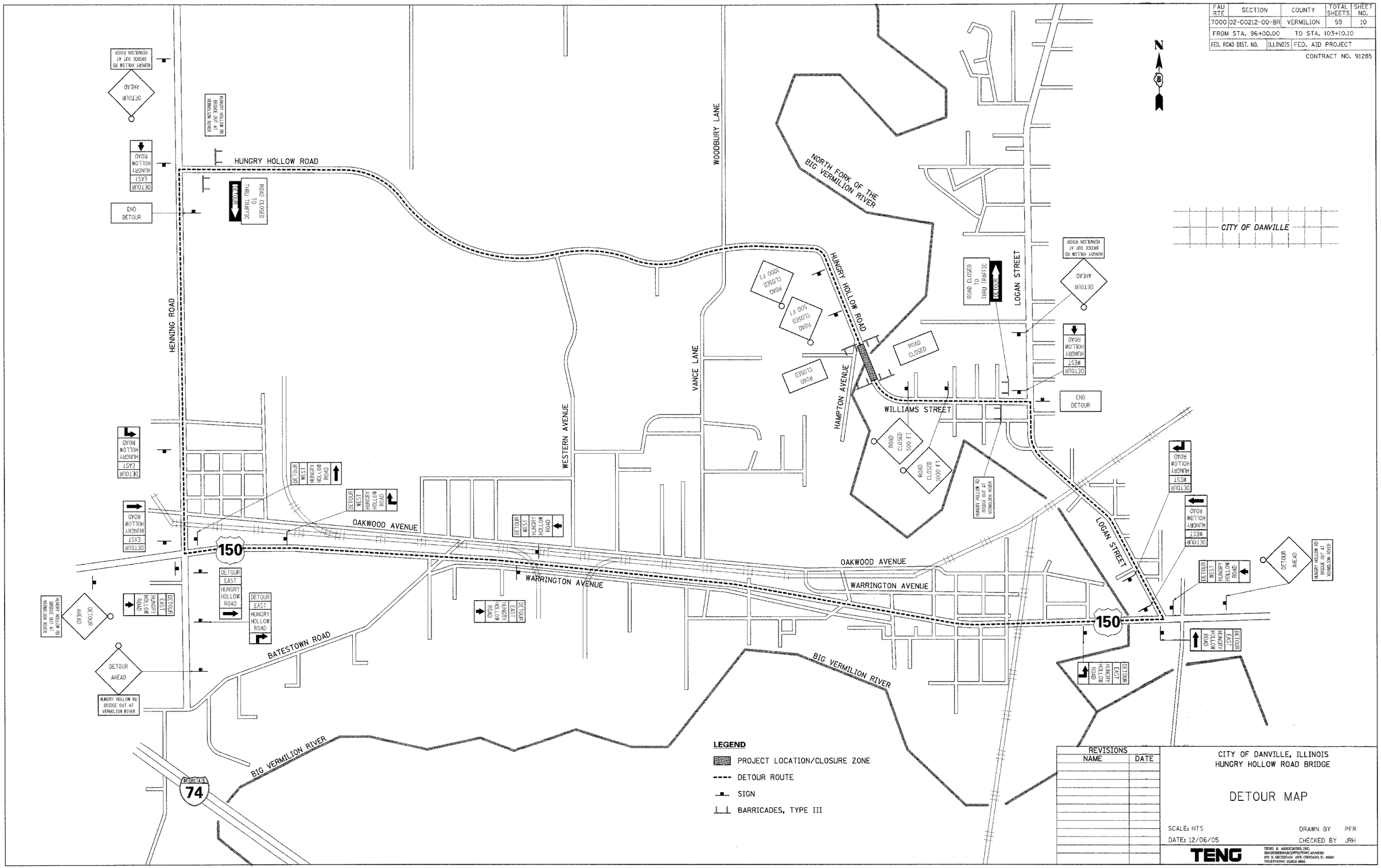

REVISIONS	
NAME	DATE

CITY OF DANVILLE, ILLINOIS
HUNGRY HOLLOW ROAD BRIDGE

DETOUR MAP

SCALE: NTS
DATE: 12/06/05

DRAWN BY PFR
CHECKED BY JRH

TENG

TENG & ASSOCIATES, INC.
ENGINEERS/ARCHITECTS/PLANNERS
205 N. MICHIGAN AVE. CHICAGO, IL 60601
TELEPHONE: 312/616-0060

ROSSPF

S:\DOCUMENT\02336902\CIVIL\DGN\MOTODPMAP.DGN

MOTODPMD.DGN
12-07-2005, 13:31:0

FAU RTE	SECTION	COUNTY	TOTAL SHEETS	SHEET NO.
7000	02-00212-00-BR	VERMILION	59	11
FROM STA. 96+00.00		TO STA. 103+10.10		
FED. ROAD DIST. NO.	ILLINOIS	FED. AID PROJECT		

CONTRACT NO. 91285

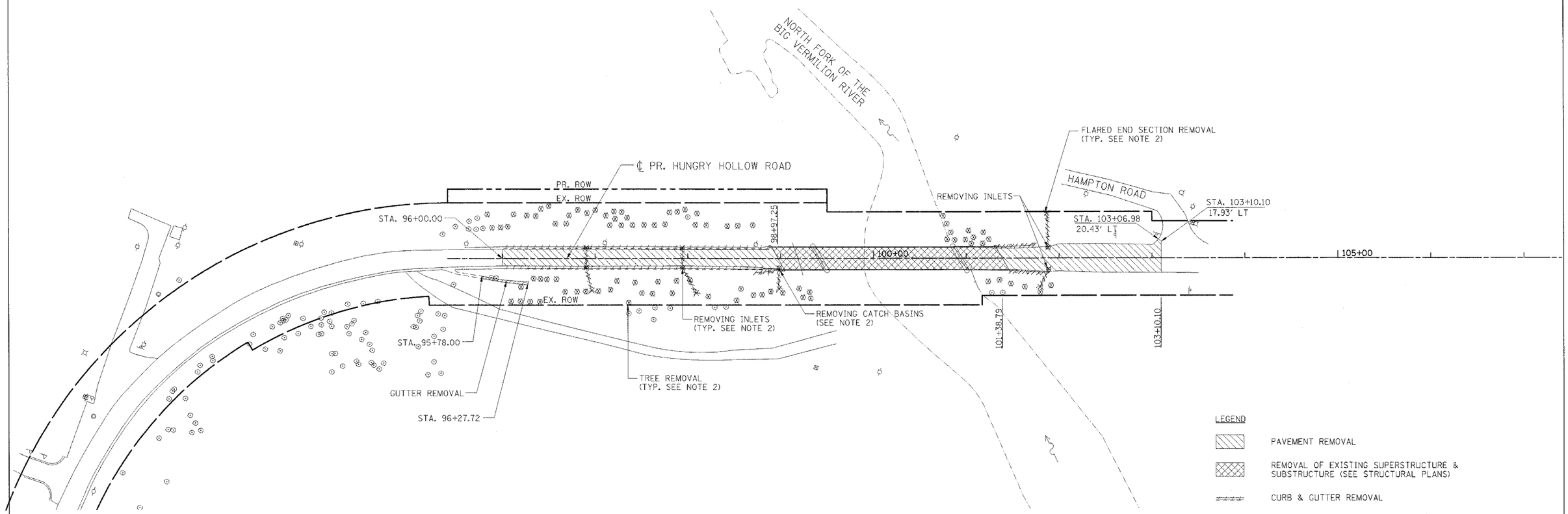

LEGEND

- PAVEMENT REMOVAL
- REMOVAL OF EXISTING SUPERSTRUCTURE & SUBSTRUCTURE (SEE STRUCTURAL PLANS)
- CURB & GUTTER REMOVAL
- GUARDRAIL REMOVAL
- STORM SEWER REMOVAL
- GUTTER REMOVAL
- TREE REMOVAL

NOTES:

1. THE EXISTING TREE LOCATIONS ARE BASED ON A FIELD INSPECTION. THE CONTRACTOR SHALL VERIFY THE LOCATION OF TREES TO BE REMOVED.
2. SEE SCHEDULE OF QUANTITIES FOR LOCATIONS OF REMOVING INLETS, CATCH BASINS, FLARED END SECTIONS AND TREES.

REVISIONS	
NAME	DATE

CITY OF DANVILLE, ILLINOIS
HUNGRY HOLLOW ROAD BRIDGE

ROADWAY AND DRAINAGE REMOVAL PLAN

SCALE: 1"=50'
DATE: 12/06/05
DRAWN BY MRK
CHECKED BY JRH

TENG

TENG & ASSOCIATES, INC.
ENGINEERS/ARCHITECTS/PLANNERS
205 N. MICHIGAN AVE, CHICAGO, IL 60601
TELEPHONE: 312/616-0600

\TP000P7.DGN...\ROWOOPR6.DGN...\UTLOOPR0.DGN...\ALT00P85.DGN...\TP000P4.DGN...\TTB00PMD.DGN...\CONOOPF6.DGN...\ROWOOPR5.DGN ROSSPF
12-01-2005 13:36:09 s:\DOCUMENT\02336902\CIVIL\DGN\REMOOPOH.DGN

FAU RTE	SECTION	COUNTY	TOTAL SHEETS	SHEET NO.
7000	02-00212-00-BR	VERMILION	59	12
FROM STA. 96+00.00		TO STA. 103+10.10		
FED. ROAD DIST. NO.	ILLINOIS	FED. AID PROJECT		

CONTRACT NO. 91285

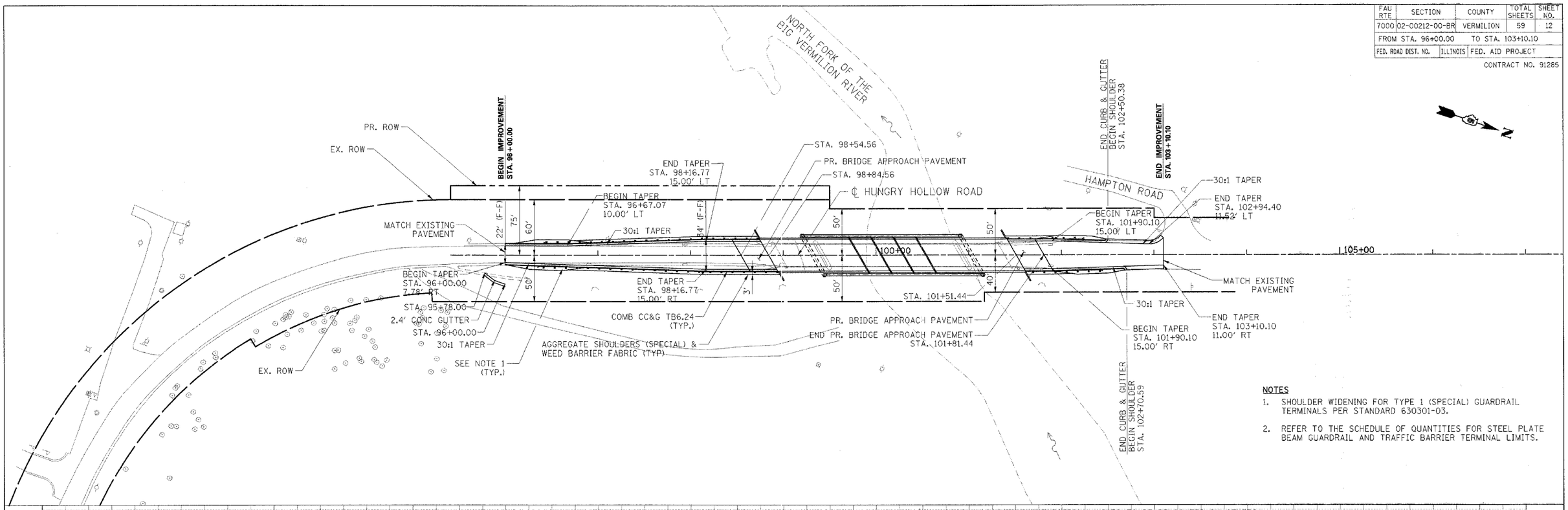

NOTES

1. SHOULDER WIDENING FOR TYPE 1 (SPECIAL) GUARDRAIL TERMINALS PER STANDARD 630301-03.
2. REFER TO THE SCHEDULE OF QUANTITIES FOR STEEL PLATE BEAM GUARDRAIL AND TRAFFIC BARRIER TERMINAL LIMITS.

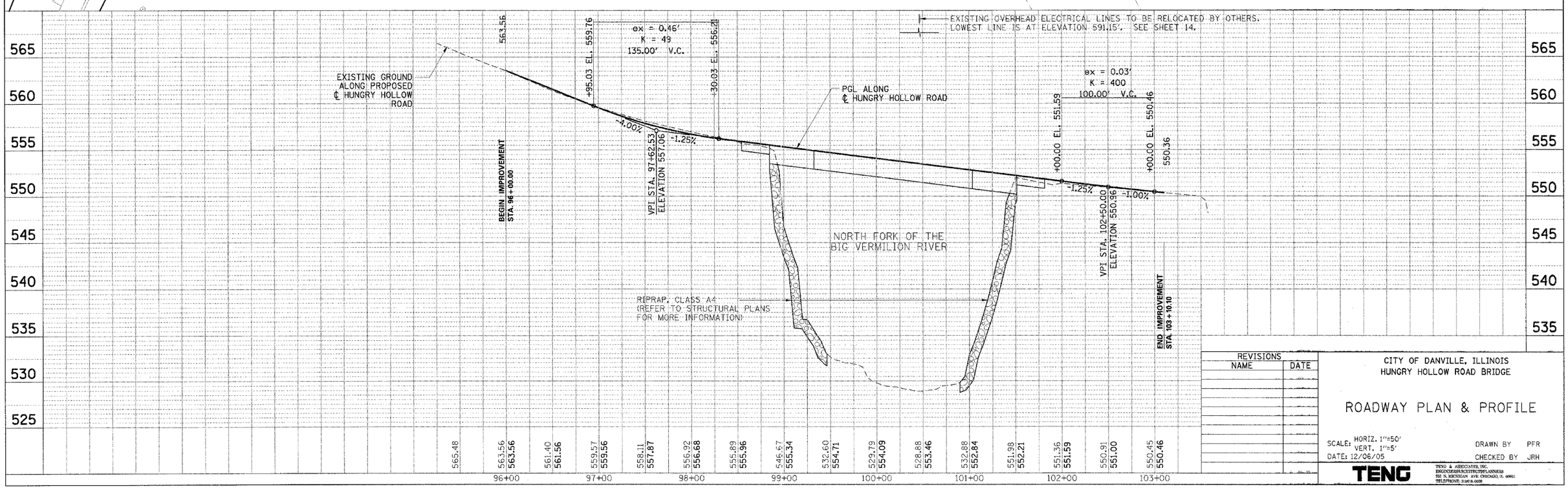

REVISIONS	
NAME	DATE

CITY OF DANVILLE, ILLINOIS
HUNGRY HOLLOW ROAD BRIDGE

ROADWAY PLAN & PROFILE

SCALE: HORIZ. 1"=50'
VERT. 1"=5'
DATE: 12/06/05

DRAWN BY PFR
CHECKED BY JRH

TENG

TENG & ASSOCIATES, INC.
ENGINEERS/ARCHITECTS/PLANNERS
192 N. MICHIGAN AVE. CHICAGO, IL 60601
TELEPHONE: 312-616-0000

..\TP0001J..DGN..\ROWOQP86.DGN..\UTLOQP80.DGN..\ALTOQP83.DGN..\TTB00PMD.DGN..\PRFOOP85.DGN..\PRFOOP85.DGN..\ROWOOP85.DGN
12-07-2005,13:53:08 S:\DOCUMENT\02336902\CIVIL\DGN\PMPOQPFC6.DGN
ROSSPF

FAU RTE	SECTION	COUNTY	TOTAL SHEETS	SHEET NO.
7000	02-00212-00-BR	VERMILION	59	13
FROM STA. 96+00.00		TO STA. 103+10.10		
FED. ROAD DIST. NO.	ILLINOIS	FED. AID PROJECT		

CONTRACT NO. 91285

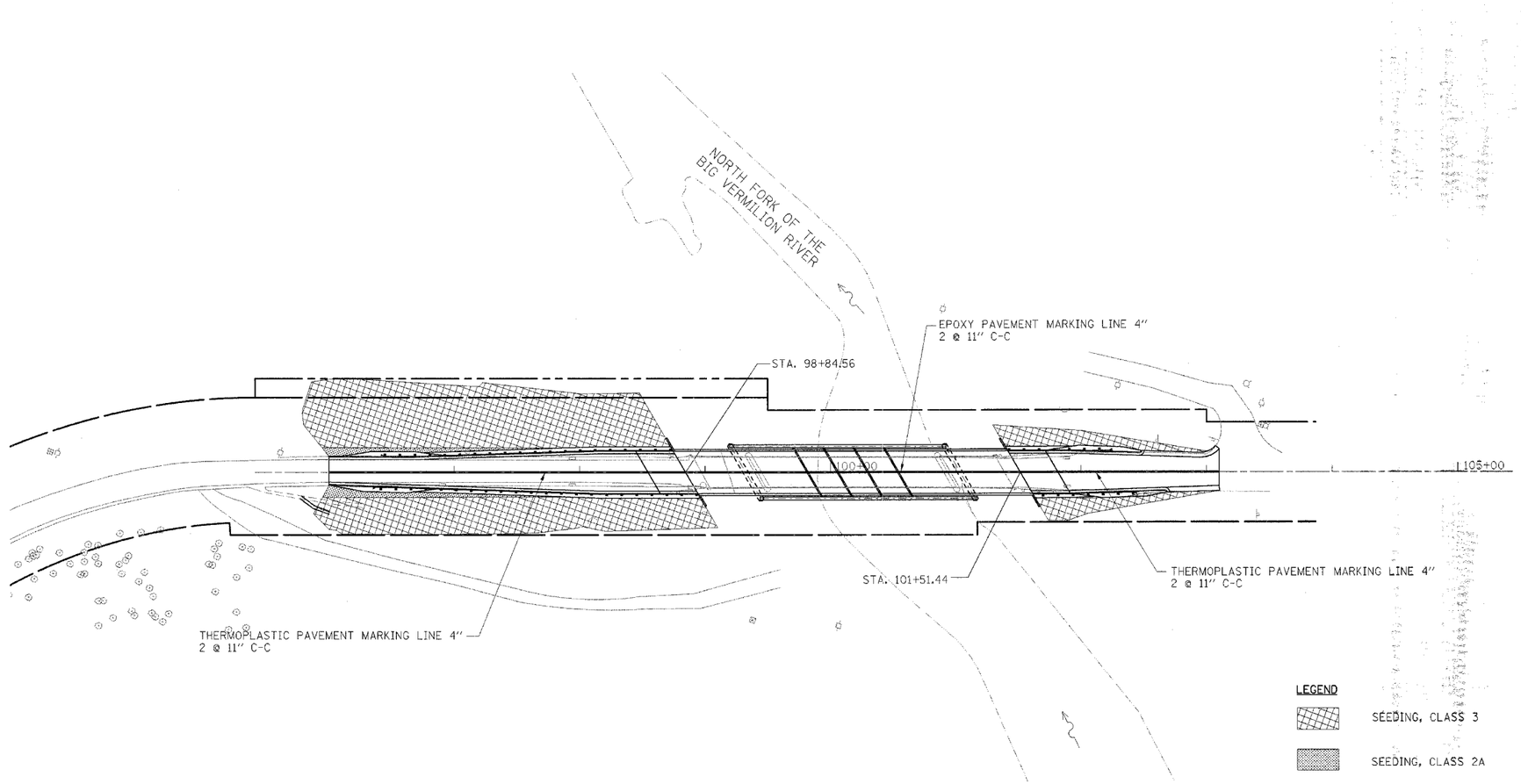

LEGEND

SEEDING, CLASS 3

SEEDING, CLASS 2A

NOTES

1. THERMOPLASTIC PAVEMENT MARKINGS SHALL BE APPLIED ON BITUMINOUS PAVEMENT, INCLUDING THE APPROACH PAVEMENT. STATION RANGES ARE FROM 96+00 TO 98+84.56 AND 101+51.44 TO 103+10.10.

2. EPOXY PAVEMENT MARKINGS SHALL BE APPLIED ON THE BRIDGE FROM STATION 98+84.56 TO 101+51.44.

3. GUARDRAIL REFLECTORS AND TERMINAL MARKERS SHALL BE MOUNTED PER STANDARD 635011 AND PLACED PER STANDARD 635006.

REVISIONS	
NAME	DATE

CITY OF DANVILLE, ILLINOIS
HUNGRY HOLLOW ROAD BRIDGE

PAVEMENT MARKING & LANDSCAPING

SCALE: 1"=50'
DATE: 12/06/05

DRAWN BY PFR
CHECKED BY JRH

TENG

TENG & ASSOCIATES, INC.
ENGINEERS/ARCHITECTS/PLANNERS
205 N. MICHIGAN AVE. CHICAGO, IL 60601
TELEPHONE: 312616-0202

R05.PF

..\ALT00P83.DGN,..\TTB00PMD.DGN,..\RDW00P86.DGN,..\RDW00P85.DGN,..\TP000P7_.DGN,..\PNP00PC6.DGN,..\LN00PR8.DGN
12-07-2005,135307
S:\DOCUMENT\02356902\CIVIL\DGN\PM00PM6.DGN

FAU RTE	SECTION	COUNTY	TOTAL SHEETS	SHEET NO.
7000	02-00212-00-BR	VERMILION	59	14
FROM STA. 96+00.00		TO STA. 103+10.10		
FED. ROAD DIST. NO.	ILLINOIS	FED. AID PROJECT		

CONTRACT NO. 91285

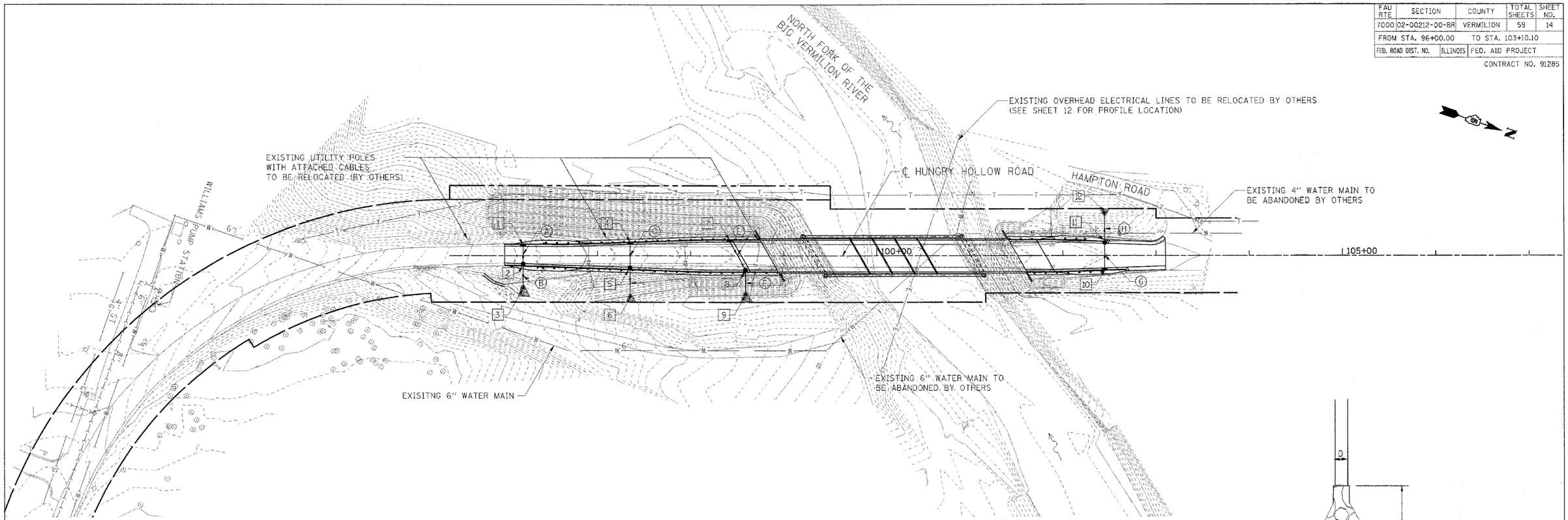

DRAINAGE STRUCTURE SCHEDULE

NUMBER	TYPE	STATION	OFFSET	RIM	INVERT EAST	INVERT WEST
1	INLETS, TYPE B TYPE 24 FRAME & GRATE	96+20.00	10.72' LT	562.44	558.81	
2	CATCH BASINS, TYPE A, 4' DIA. TYPE 24 FRAME & GRATE	96+20.00	8.44' RT	562.47	557.93	558.50
3	END SECTIONS 12"	96+20.00	32.26' RT			557.60
4	INLETS, TYPE B TYPE 24 FRAME & GRATE	97+35.00	12.80' LT	557.95	554.33	
5	CATCH BASINS, TYPE A, 4' DIA. TYPE 24 FRAME & GRATE	97+35.00	12.30' RT	557.95	552.58	553.68
6	END SECTIONS 12"	97+35.00	40.90' RT			549.38
7	INLETS, TYPE B TYPE 24 FRAME & GRATE	98+41.74	15.00' LT	555.65	552.03	
8	CATCH BASINS, TYPE A, 4' DIA. TYPE 24 FRAME & GRATE	98+59.00	15.00' RT	555.43	548.06	551.07
9	END SECTIONS 12"	98+59.00	39.73' RT			545.33
10	INLETS, TYPE B TYPE 24 FRAME & GRATE	102+45.00	13.20' RT	550.67		547.04
11	CATCH BASINS, TYPE A, 4' DIA. TYPE 24 FRAME & GRATE	102+45.00	13.17' LT	550.67	546.34	545.29
12	END SECTIONS 12"	102+45.00	42.13' LT		542.06	

DRAINAGE PIPE SCHEDULE

I.D.	TYPE	LENGTH	SLOPE	TRENCH BACKFILL (CU YD)
A	PIPE CULVERTS, TYPE 1, RCCP 12"	15.68'	2.0%	7.56
B	PIPE CULVERTS, TYPE 1, RCCP 12"	21.83'	1.5%	1.66
C	PIPE CULVERTS, TYPE 1, RCCP 12"	21.59'	3.0%	11.09
D	PIPE CULVERTS, TYPE 1, RCCP 12"	27.38'	12.0%	1.92
E	PIPE CULVERTS, TYPE 1, RCCP 12"	32.00'	3.0%	16.74
F	PIPE CULVERTS, TYPE 1, RCCP 12"	23.37'	12.0%	2.57
G	PIPE CULVERTS, TYPE 1, RCCP 12"	23.39'	3.0%	12.16
H	PIPE CULVERTS, TYPE 1, RCCP 12"	27.72'	12.0%	1.93

LEGEND

- PROPOSED INLET
- PROPOSED CATCH BASIN
- PROPOSED END SECTION
- PROPOSED STORM SEWER
- PROPOSED RIP RAP
- [1] PROPOSED DRAINAGE STRUCTURE
- (A) PROPOSED DRAINAGE PIPE

—W— EXISTING WATER MAIN

—E—E—E— EXISTING ELECTRICAL LINE

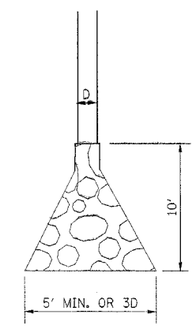

D = DIAMETER OF PIPE

STONE RIPRAP, CLASS A3
PLAN VIEW, N.T.S.

NOTES

1. SEE STANDARD 602001 FOR CATCH BASIN, TYPE A DETAILS.
2. SEE STANDARD 602306 FOR INLET - TYPE B DETAILS.
3. SEE STANDARD 604091 FOR TYPE 24 FRAME AND GRATE DETAILS.
4. SEE STANDARD 542001 FOR REINFORCED CONCRETE END SECTIONS AND SHALL BE PAID FOR AT THE CONTRACT UNIT PRICE EACH FOR END SECTIONS 12".
5. 12" RCP SHALL BE PAID FOR AT THE CONTRACT UNIT PRICE FOOT FOR PIPE CULVERTS, TYPE 1 RCCP 12".

REVISIONS	
NAME	DATE

CITY OF DANVILLE, ILLINOIS
HUNGRY HOLLOW ROAD BRIDGE

DRAINAGE, UTILITIES & GRADING PLAN

SCALE: 1"=50'
DATE: 12/06/05

DRAWN BY MRK
CHECKED BY JRH

TENG
TENG & ASSOCIATES, INC.
ENGINEERS/ARCHITECTS/PLANNERS
205 N. MICHIGAN AVE. CHICAGO, IL 60601
TEL (312)616-0800

\TPOOOFT_.DGN...\RDWOOP86.DGN...\UTLOOPR0.DGN...\ALTOOP83.DGN...\DRAOOPR0.DGN...\TTROOPM0.DGN...\CONOOPF6.DGN...\ROWOOP85.DGN
12-07-2005, 13:15:06 S:\DOCUMENT\02356902\CIVIL\DGN\DRAOOPMA.DGN ROSSPF

FAU RTE.	SECTION	COUNTY	TOTAL SHEETS	SHEET NO.
7000	02-00212-00-BR	VERMILION	59	15
FROM STA. 96+00.00		TO STA. 103+10.10		
FED. ROAD DIST. NO.	ILLINOIS	FED. AID PROJECT		

CONTRACT NO. 91285

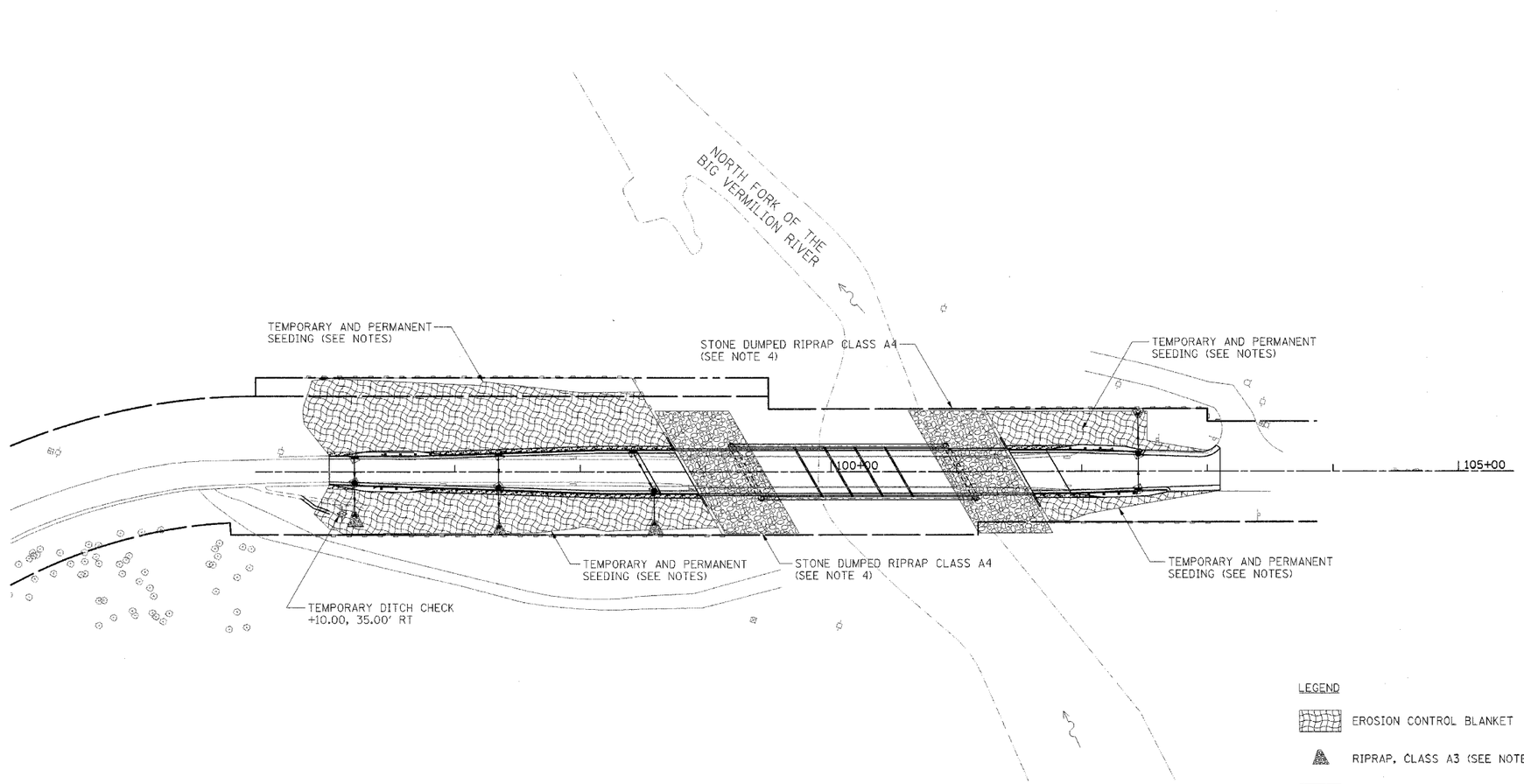

LEGEND

- EROSION CONTROL BLANKET
- RIPRAP, CLASS A3 (SEE NOTE 3)
- STONE DUMPED RIPRAP, CLASS A4
- PERIMETER EROSION BARRIER
- INLET AND PIPE PROTECTION
- TEMPORARY DITCH CHECK

INTENDED SEQUENCE OF EROSION CONTROL

1. PLACEMENT OF PERIMETER EROSION BARRIER PRIOR TO COMMENCEMENT OF ANY WORK.
2. REMOVAL OF THE EXISTING STRUCTURE AND ROADWAY.
3. CONSTRUCTION OF THE PROPOSED STRUCTURE.
4. CONSTRUCTION OF THE PROPOSED ROADWAY EMBANKEMENT.
5. CONSTRUCTION OF THE PROPOSED ROADWAY.
6. PLACEMENT AND MAINTENANCE OF TEMPORARY EROSION CONTROL MEASURES.
7. FINAL GRADING OF THE PROPOSED EMBANKMENT.
8. REMOVAL AND PROPER CLEANUP OF TEMPORARY EROSION CONTROL MEASURES.
9. PLACEMENT OF THE PERMANENT EROSION CONTROL MEASURES.

NOTES

1. TEMPORARY SEEDING SHALL BE IN PLACE AS SOON AS POSSIBLE ON ALL DISTURBED GROUND.
2. PERMANENT SEEDING SHALL BE IN PLACE AFTER TOP SOIL HAS BEEN SPREAD OVER THE EMBANKMENT. REFER TO SHEET 13 FOR FURTHER PERMANENT SEEDING INFORMATION.
3. THE RIPRAP SHOWN ON THIS SHEET IS THE SAME AS THE RIPRAP SHOWN ON SHEET 14.
4. REFER TO THE STRUCTURAL PLANS FOR MORE INFORMATION ON THE STONE DUMPED RIPRAP, CLASS A4.
5. ADDITIONAL EROSION CONTROL MEASURES MAY BE REQUIRED AT THE DISCREATION OF THE ENGINEER.

REVISIONS	
NAME	DATE

CITY OF DANVILLE, ILLINOIS
HUNGRY HOLLOW ROAD BRIDGE

EROSION CONTROL PLAN

SCALE: 1"=50'
DATE: 12/06/05

DRAWN BY MRK
CHECKED BY JRH

TENG

TENG & ASSOCIATES, INC.
ENGINEERS/ARCHITECTS/PLANNERS
205 N. MICHIGAN AVE. CHICAGO, IL 60601
TELEPHONE: 312/616-0220

ROSSPF
..\ALT00PR3.DGN,..\TTB00PWD.DGN,..\ROW00PR6.DGN,..\ROW00PR5.DGN,..\TP000P7_.DGN,..\ERC00POR.DGN,..\DRA00PRO.DGN
12-07-2005,13:13:05 S:\DOCUMENT\02336902\CIVIL\DGN\ERC00PD5.DGN

FAU RTE	SECTION	COUNTY	TOTAL SHEETS	SHEET NO.
7000	02-00212-00-BR	VERMILION	59	16
FROM STA. 96+00.00		TO STA. 103+10.10		
FED. ROAD DIST. NO.	ILLINOIS	FED. AID PROJECT		

CONTRACT NO. 91285

BENCHMARK:
TBM#2 - Square cut on top of northeast wingwall of existing Hungry Hollow Rd. Bridge over North Fork of Vermillion River. Elev. 551.84

EXISTING STRUCTURE:
SN 092-0106 built in 1934 is three-span structure, 246'-10" Bk.-Bk. abutments. The outer spans measure 48'-5" each and consist of steel deck "I" beams. The center span measures 150'-0" and is a steel Pratt through truss. The bridge deck is reinforced concrete with asphalt overlay, 24'-0" wide between curbs.

No Salvage

LEGEND

- SB-0 Soil Boring Location
- Exist. Storm Sewer
- —W— Exist. Water Main
- —T— Exist. Telephone Line

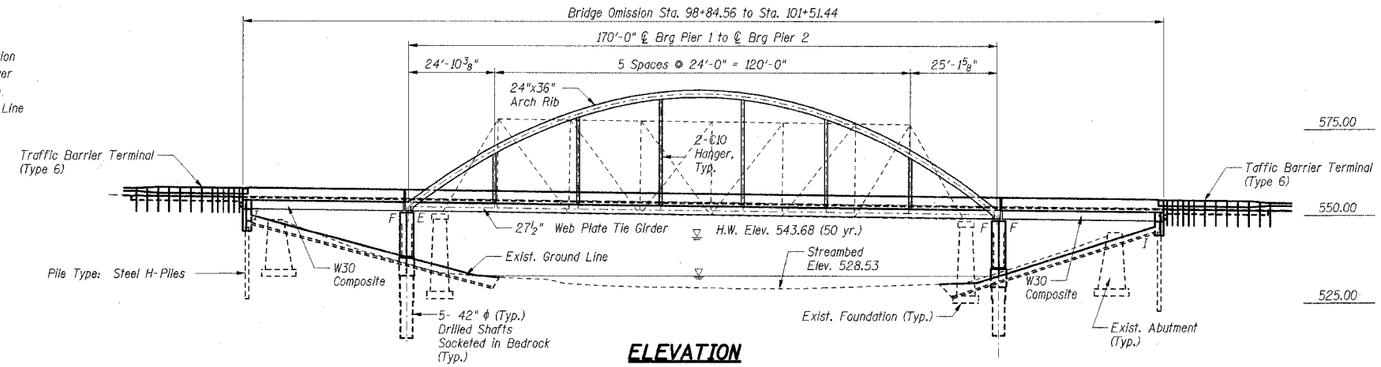

ELEVATION

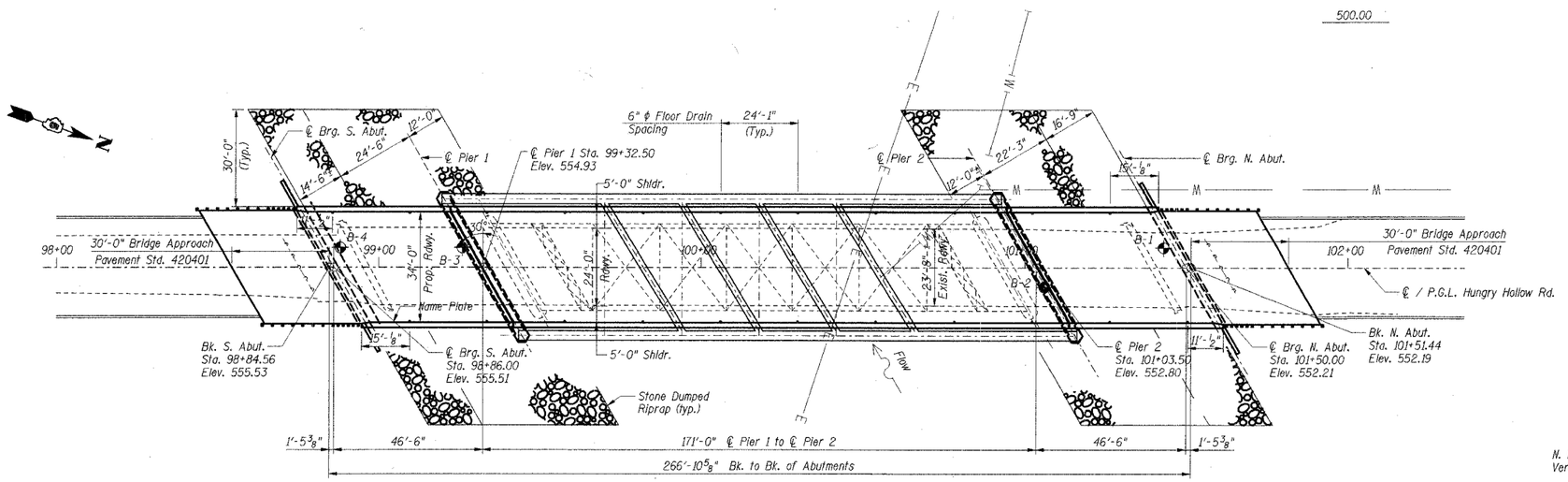

PLAN

DESIGN SPECIFICATIONS
AASHTO Standard Specifications for Highway Bridges, 17th Edition
AASHTO/AWS - D1.5M/D1.5 Bridge Welding Code - 2002 Edition.

DESIGN LOADING:
Roadway Live Load: HS 20-44
Future Wearing Surface = 50 psf

Bridge has been designed to accomodate loss of one hanger assuming full live load under Group I LFD Load Combinations and a 33% overstress on remaining hangers.

DEFLECTIONS
Bridge has been designed to limit live load deflections of Arch Ribs to Span/1200.

DESIGN STRESSES:
Concrete, f'c = 3,500 psi
Reinforcement, fy = 60,000 psi
Structural Steel, fy = 50,000 psi (M 270 Grade 50W)
fy = 46,000 psi (ASTM A847)

SEISMIC DATA:
Seismic Performance Category (SPC) = A
Bedrock Acceleration Coefficient (A) = 0.05g
Site Coefficient (S) = 1.0

LICENSED STRUCTURAL ENGINEER ROMAN R. SHUKAN CHICAGO, ILLINOIS ILLINOIS
12/7/05
EXPIRES 11/30/06

STATE OF ILLINOIS HOSSAM M. ABDOU 081-038687 STRUCTURAL ENGINEER
EXPIRATION DATE 11/30/06
DATE 12/7/05
Checked for Structural Adequacy

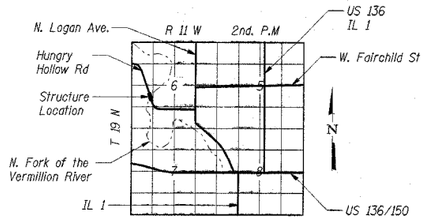

LOCATION SKETCH

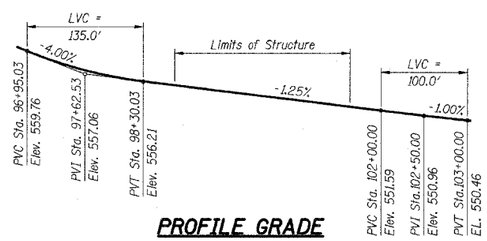

PROFILE GRADE

WATERWAY INFORMATION

Drainage Area = 298 Sq. Mi. Low Grade Elev..

Flood	Freq. Yr.	Q C.F.S.	Opening Sq. Ft. Exist.	Opening Sq. Ft. Prop.	Nat. H.W.E.	Head - Ft. Exist.	Head - Ft. Prop.	Headwater El. Exist.	Headwater El. Prop.
Design	50	12,580	1928.02	2149.01	543.68	0.17	0.09	543.70	543.62
Base	100	14,300	2071.96	2313.00	544.42	0.23	0.15	544.49	544.41
Overtopping									
Max. Calc.	500				546.04				

SHT. S-01 OF 40

REVISIONS NAME	DATE

CITY OF DANVILLE, ILLINOIS
HUNGRY HOLLOW ROAD BRIDGE

GENERAL PLAN & ELEVATION

SCALE: 1"=20'
DATE 12/06/05
DRAWN BY RAM
CHECKED BY JRH

TENG
TENG & ASSOCIATES, INC.
ENGINEERS/ARCHITECTS/PLANNERS
205 W. MONROE AVE. CHICAGO, IL 60606
TELEPHONE 312/372-0200

..\ALT00P83.DGN, ..\RDWY00P96.DGN, ..\RDWY00P95.DGN, ..\SUR00P84.DGN, ..\TP000P7_.DGN, ..\UTL00P80.DGN, ..\TTB000Z9.DGN, ..\SBL00P70.DGN, ..\FP00GPSY.DGN, ..\CONG00PFG.DGN
12-06-2005, 142435 S:\DOCUMENT\02256502\STRUCT\DGN\GPE00P72.DGN
ROSSPP

FAU RTE	SECTION	COUNTY	TOTAL SHEETS	SHEET NO.
7000	02-00212-00-BR	VERMILION	59	17
FROM STA. 96+00.00		TO STA. 103+10.10		
FED. ROAD DIST. NO.	ILLINOIS	FED. AID PROJECT		

CONTRACT NO. 91285

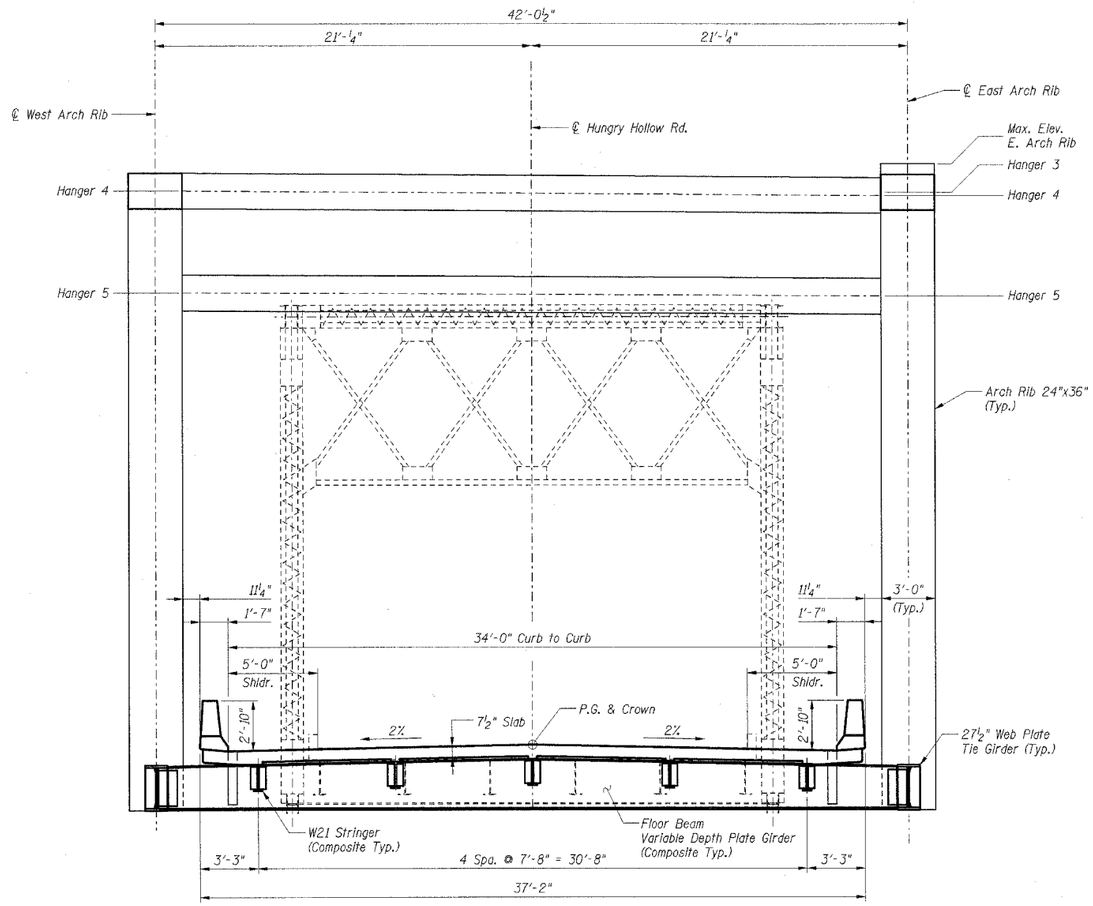

MIDSPAN CROSS SECTION

(Perpendicular to P.G.L. at Station 100+18.00)

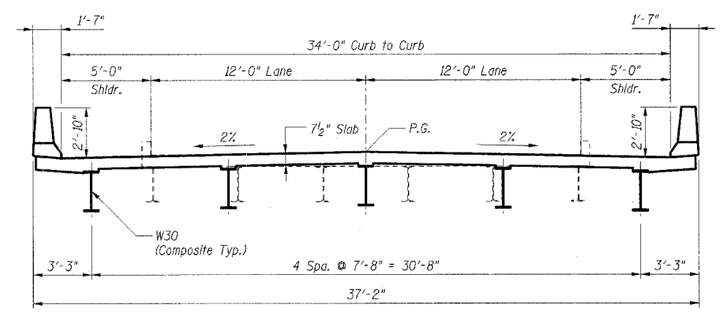

TYPICAL SECTION APPROACH SPAN

SHT. S-02 OF 40

REVISIONS	
NAME	DATE

CITY OF DANVILLE, ILLINOIS
HUNGRY HOLLOW ROAD BRIDGE

BRIDGE CROSS SECTIONS

SCALE: ¼"=1'
DATE 12/06/05

DRAWN BY RAM
CHECKED BY JRH

TENG

TENG & ASSOCIATES, INC.
ENGINEERS/ARCHITECTS/PLANNERS
303 N. MICHIGAN AVE. CHICAGO, IL 60601
TELEPHONE: 312/565-1000

ROSSPF
S:\DOCUMENT\02336902\STRUCT\DGN\DASOOFTX.DGN
..\TIB0002G.DGN
12-07-2005,13:36:01

FAU RTE	SECTION	COUNTY	TOTAL SHEETS	SHEET NO.
7000	02-00212-00-BR	VERMILION	59	18
FROM STA. 96+00.00		TO STA. 103+10.10		
FED. ROAD DIST. NO.	ILLINOIS	FED. AID PROJECT		

CONTRACT NO. 91285

INDEX OF SHEETS

GENERAL PLAN & ELEVATION
BRIDGE CROSS SECTIONS
GENERAL NOTES, INDEX OF SHEETS & TOTAL BILL OF MATERIALS
ERECTION SCHEMATICS - I
ERECTION SCHEMATICS - II
SUBSTRUCTURE LAYOUT & DRILLED SHAFT DETAILS
TOP OF DECK ELEVATIONS APPROACH SPANS
TOP OF DECK ELEVATIONS MAIN SPAN - I
TOP OF DECK ELEVATIONS MAIN SPAN - II
DECK PLAN & CROSS SECTION APPROACH SPANS
DECK PLAN & CROSS SECTION MAIN SPAN
PARAPET ELEVATIONS & DETAILS APPROACH SPANS
PARAPET ELEVATIONS & DETAILS MAIN SPAN
EXPANSION JOINT DETAILS
STRUCTURAL STEEL FRAMING PLAN & DETAILS APPROACH SPANS
STRUCTURAL STEEL FRAMING PLAN & DETAILS MAIN SPAN
ARCH RIB ELEVATION & GEOMETRY - I
ARCH RIB ELEVATION & GEOMETRY - II
TIE GIRDER ELEVATION
TIE GIRDER SPLICE DETAILS
TIE GIRDER DETAILS - I
TIE GIRDER DETAILS - II
TRANSVERSE FLOOR BEAM ELEVATIONS
TRANSVERSE FLOOR BEAM CONNECTION DETAILS
LONGITUDINAL STRINGER ELEVATIONS
FLOOR SYSTEM LATERAL BRACING DETAILS
ARCH RIB DETAILS
HANGER DETAILS
BEARING DETAILS APPROACH SPANS
BEARING DETAILS MAIN SPAN
ANCHOR BOLT DETAILS
SOUTH ABUTMENT PLAN, ELEVATION & SECTION
NORTH ABUTMENT PLAN, ELEVATION & SECTION
ABUTMENT DIAPHRAGM ELEVATION & SECTION
APPROACH SLAB PLAN & DETAILS
PIER 1
PIER 2
BAR SPLICER DETAILS
SOIL BORING LOG - I
SOIL BORING LOG - II

GENERAL NOTES:

1. Fasteners shall be high strength bolts AASHTO M 164, Type 3. Bolts $\frac{7}{8}$"ϕ, open holes $\frac{15}{16}$"ϕ, unless otherwise noted.

2. All structural steel shall be AASHTO M 270 Grade 50W except, lower lateral bracing which shall be ASTM A847, expansion joint plates and attached bars which shall be AASHTO M 270 Grade 50.

3. Calculated weight of Structural Steel :
   AASHTO M 270 Grade 50W= 449,452 Lbs.
   Approach Span Framing = 46,035 Lbs.
   Tie-Girders = 104,978 Lbs.
   Arch Ribs = 134,649 Lbs.
   Transverse Beams = 65,642 Lbs.
   Hangers = 12,505 Lbs.
   Stringers = 41,530 Lbs.
   Upper Lateral Bracing = 31,730 Lbs.
   Anchor Bolts = 350 Lbs.
   A847 Grade = 12,383 Lbs.
   Lower Lateral Bracing = 12,383 Lbs.

4. Expansion joint plates and attached bars shall be shop painted with the inorganic zinc rich primer.

5. Field welding of construction accessories will not be permitted to ties, beams or girders.

6. Anchor bolts shall be set before bolting diaphragms over supports.

7. The structural steel bearing plates of the Elastomeric Bearing Assembly shall conform to the requirements of AASHTO M 270 Grade 50W.

8. The main load carrying member components subject to tensile stress shall conform to the Supplemental Requirements for Notch Toughness Zone 2. These components are the wide flange beams, transverse floor beams, hangers, tie-girders and all splice plate material except fill plates.

9. Reinforcement bars shall conform to the requirements of AASTHO M31 or M322 Grade 60.

10. All AASHTO M 270 Grade 50W and ASTM A847 steel shall be painted in accordance with the Special Provisions for "Cleaning and Painting New Metal Structures". The color of the finish coat supplied shall match the Federal Color Standard 595a 20045. The Inorganic Zinc/Acrylic/Acrylic Paint System shall be used.

11. Layout of slope protection system may be varied in the field to suit ground conditions as directed by the Engineer.

12. The embankment configuration shown shall be minimum embankment that must be constructed prior to construction of the abutments.

13. Plan dimensions and details relative to existing structures have been taken from existing plans and are subject to nominal construction variations. It shall be the Contractor's responsibility to verify such dimensions and details in the field and make necessary approved adjustments prior to construction for a change in the scope of work, however, the Contractor wil be paid for the quantity actually furnished at the unit price for the work.

14. The back face of Integral Abutments and their wingwalls shall be waterproofed according to Article 503.18 of the Standard Specifications.

15. Bearing seat surfaces shall be constructed or adjusted to the designated elevations within a tolerance of $\frac{1}{8}$ inch. Adjustment shall be made either by grinding the surface or by shimming the bearing. Two $\frac{1}{8}$" adjusting shims, of the dimensions of the bottom bearing plate, shall be provided for each bearing in addition to all other plates or shims. For Type I Elastomeric Bearings, two $\frac{1}{8}$" adjusting shims shall be provided for each bearing and placed as detailed.

16. The contractor shall drive 2 HP 12X53 test piles in a permanent location at the abutments and piers as shown in the plans and directed by the Engineer before ordering the remainder of piles.

17. The concrete deck shall be placed continuously starting at the west abutment unless directed by the Engineer.

18. Protective Coat for the bridge deck shall be in accordance with Article 503.19 of the Std. Spec's and for the bridge approach slabs in accordance with Article 420.21 of the Std. Spec's.

19. Existing overhead Electrical power lines to be relocated by AmerinIP.

20. Bridge Seat Sealer shall be applied to the seat area of Piers 1 and 2.

TOTAL BILL OF MATERIAL

PAY ITEM NO.	DESCRIPTION	UNIT	SUB	SUPER	TOTAL
* 20700400	Porous Granular Embankment (Special)	Cu. Yd.	178		178
281007XX	Stone Dumped RipRap, Class A4	Sq. Yd.	1270		1270
28200200	Filter Fabric	Sq. Yd.	1270		1270
42001165	Bridge Approach Pavement	Sq. Yd.	187		187
50100200	Removal of Existing Structures	L. Sum	1		1
50200100	Structure Excavation	Cu. Yd.	299		299
* Z0008248	Drilled Shaft in Soil 48"	Foot	54		54
* Z0008342	Drilled Shaft in Rock 42"	Foot	105		105
50300100	Floor Drains	Each		22	22
50300225	Concrete Structures	Cu. Yd.	311.1		311.1
50300255	Concrete Supersfructure	Cu. Yd.		320.5	320.5
50300260	Bridge Deck Grooving	Sq. Yd.		1004	1004
50300300	Protective Coat	Sq. Yd.		1004	1004
* X5000756	Floating Bearings, Fixed, 550K	Each		1	1
* X5000757	Floating Bearings, Guided Expansion, 550K	Each		2	2
* X5000758	Floating Bearings, Non-Guided Expansion, 550K	Each		1	1
* X0323341	Bridge Joint System - Expansion	Foot		80	80
50500105	Furnishing and Erecting Structural Steel	L. Sum		1	1
50500505	Stud Shear Connectors	Each		6681	6681
50800105	Reinforcement Bars	Pound	20320		20320
50800205	Reinforcement Bars, Epoxy Coated	Pound	53590	87170	140760
51201600	Furnishing Steel Piles HP12x53	Foot	192		192
51202700	Driving Steel Piles	Foot	192		192
51203600	Test Pile Steel HP 12x53	Each	2		2
51204600	Metal Shoes	Each	8		8
51500100	Name Plates	Each		1	1
58700200	Bridge Seat Sealer	Sq. Ft.	46		46
59100100	Geocomposite Wall Drain	Sq. Yd.	94		94

* Denotes pay item with special provision.

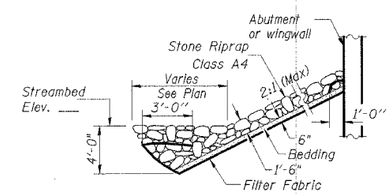

STONE RIPRAP ANCHOR DETAIL

VERMILION RIVER
BUILT BY
CITY OF DANVILLE
SECTION 02-00212-00-BR
F.A.U. RT. 7000, STA. 99+32.50
STR. NO. 092-6034 LOADING HS20

NAME PLATE
See Std. 515001

SHT. S-03 OF 40

REVISIONS	
NAME	DATE

CITY OF DANVILLE, ILLINOIS
HUNGRY HOLLOW ROAD BRIDGE

GENERAL NOTES,
INDEX OF SHEETS &
TOTAL BILL OF MATERIALS

SCALE:
DATE 12/06/05
DRAWN BY LAR
CHECKED BY JRH

TENG
TENG & ASSOCIATES, INC.
ENGINEERS•ARCHITECTS•PLANNERS
203 N. MICHIGAN AVE. CHICAGO, IL 60601
TELEPHONE 312.616.0300

R05SPF
S:\DOCUMENT\02336902\STRUCT\DGN\DX00P78.DGN
12-07-2005,585890

FAU RTE	SECTION	COUNTY	TOTAL SHEETS	SHEET NO.
7000	02-00212-00-BR	VERMILION	59	19
FROM STA. 96+00.00		TO STA. 103+10.10		
FED. ROAD DIST. NO.	ILLINOIS	FED. AID PROJECT		

CONTRACT NO. 91285

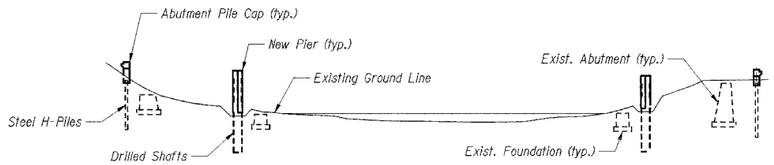

ELEVATION

PHASE I

1. Remove existing superstructure.
2. Remove existing piers and abutments to specified elevations.
3. Install steel piles for abutments and cast pile caps.
4. Install drilled shaft caissons for new piers.
5. Form and cast Piers 1 and 2.

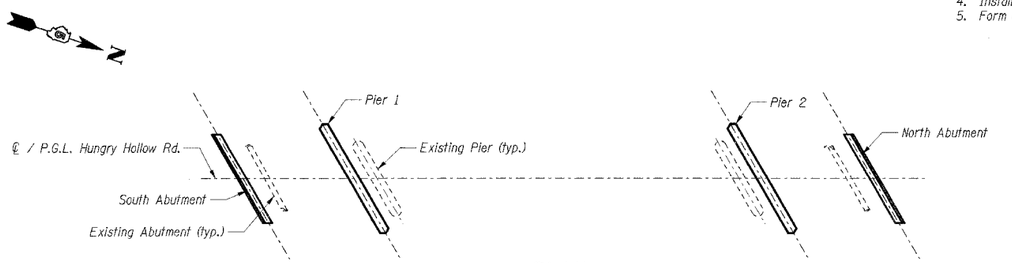

PLAN

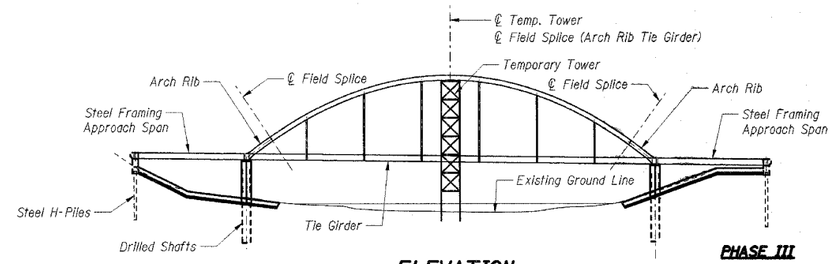

ELEVATION

PHASE III

1. Assemble arch rib field splices nearest knuckles.
2. Erect each half of arch rib supported at temporary tower and adjacent piers.
3. Field splice arch rib at ℄ of span.
4. Field splice the tie-girders.
5. Erect Transverse Beams TB3 and TB5.
6. Erect Transverse Beams TB2 and TB4.
7. Erect Arch Ribs and Lateral Bracing.
8. Attach Hangers to Arch ribs and Tie Girders.

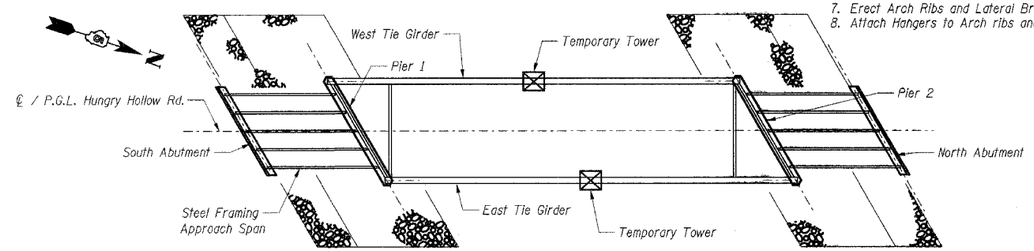

PLAN

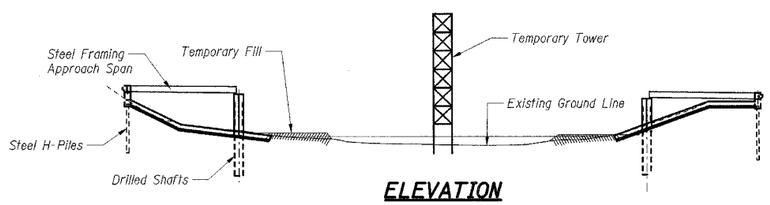

ELEVATION

PHASE II

1. Install temporary fill adjacent to piers to facilitate steel framing erection.
2. Erect steel framing for approach spans.
3. Erect temporary tower for support of main span steel framing.
4. Install bearings.

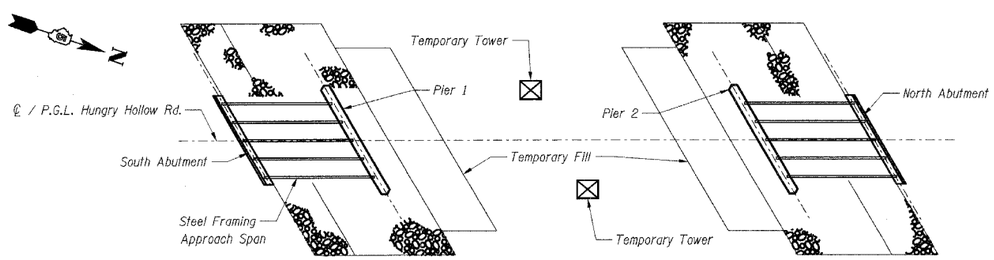

PLAN

Notes

1. The construction schematic shown details one concept for erection of the bridge over the Vermillion River. Other proposed concepts shall be submitted to the Engineer for review. Only construction staging concepts approved by the Engineer may be executed.
2. The Contractor is responsible for all temporary support details and falsework. Temporary support details shall be designed in accordance with AASHTO Standard Specifications for Bridge Temporary Works.
3. All Temporary support details for erection shall be at the Contractor's expense and shall be removed from the structure and the site before final acceptance. These items shall remain the property of the Contractor.

SHT. S-04 OF 40

REVISIONS	
NAME	DATE

CITY OF DANVILLE, ILLINOIS
HUNGRY HOLLOW ROAD BRIDGE

ERECTION SCHEMATICS - I

SCALE: DRAWN BY LAR
DATE 12/06/05 CHECKED BY

TENG

TENG & ASSOCIATES, INC.
ENGINEERS/ARCHITECTS/PLANNERS
205 N. MICHIGAN AVE. CHICAGO, IL 60601
TELEPHONE: 312/616-0800

ROSSPF
S:\DOCUMENT\02336902\STRUCT\DGN\GPE10PTB.DGN
..\TTB00029.DGN
12-07-2005, 13:36:00

FAU RTE	SECTION	COUNTY	TOTAL SHEETS	SHEET NO.
7000	02-00212-00-BR	VERMILION	59	20
FROM STA. 96+00.00		TO STA. 103+10.10		
FED. ROAD DIST. NO.	ILLINOIS	FED. AID PROJECT		

CONTRACT NO. 91285

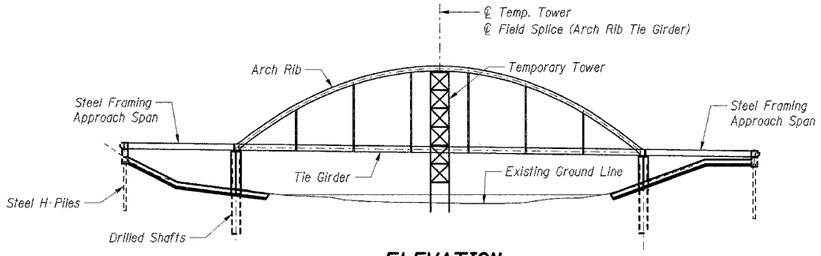

ELEVATION

PHASE IV

1. Erect remaining main span deck framing including stringers and lower lateral bracing
2. Transfer loads from termporary towers into steel framing.
3. Remove temporary tower.

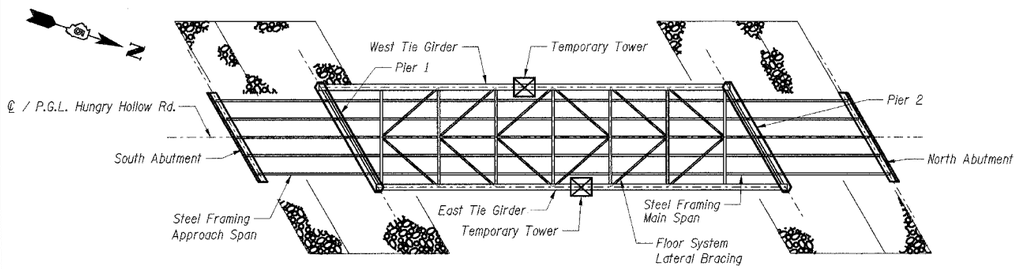

PLAN

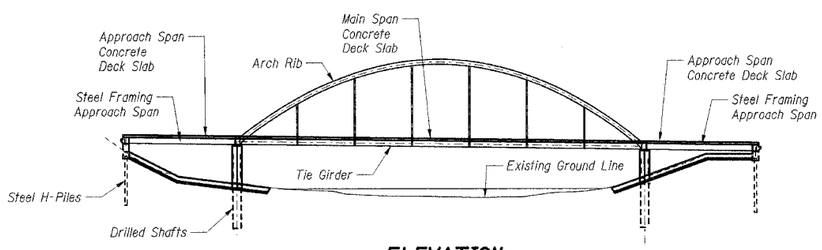

ELEVATION

PHASE V

1. Form and cast the approach and main span deck slabs.

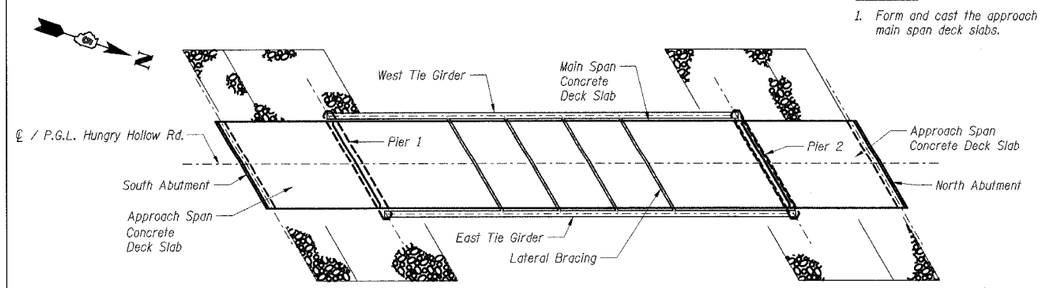

PLAN

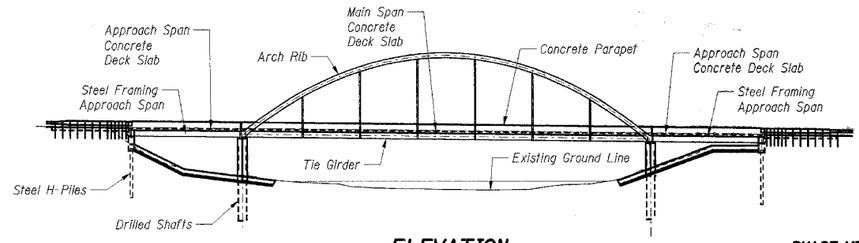

ELEVATION

PHASE VI

1. Form and cast deck parapets
2. Backfill abutments and cast approach slabs
3. Install rip-rap slope protection

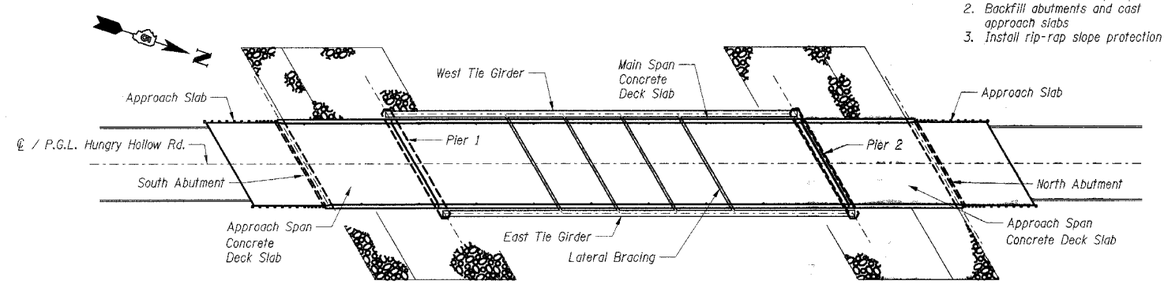

PLAN

SHT. S-05 OF 40

REVISIONS	
NAME	DATE

CITY OF DANVILLE, ILLINOIS
HUNGRY HOLLOW ROAD BRIDGE

ERECTION SCHEMATICS - II

SCALE:
DATE 12/06/05
DRAWN BY LAR
CHECKED BY

TENG

TENG & ASSOCIATES, INC.
ENGINEERS/ARCHITECTS/PLANNERS
205 N. MICHIGAN AVE. CHICAGO, IL 60601
TELEPHONE 312/565-1000

R05SFF
S:\DOCUMENT\02336902\STRUCT\DGN\SPEC0PTL.DGN
..\TTB00029.DGN
12-07-2005,15:25:59

FAU RTE	SECTION	COUNTY	TOTAL SHEETS	SHEET NO.
7000	02-00212-00-BR	VERMILION	59	21
FROM STA. 96+00.00		TO STA. 103+10.10		
FED. ROAD DIST. NO.	ILLINOIS	FED. AID PROJECT		

CONTRACT NO. 91285

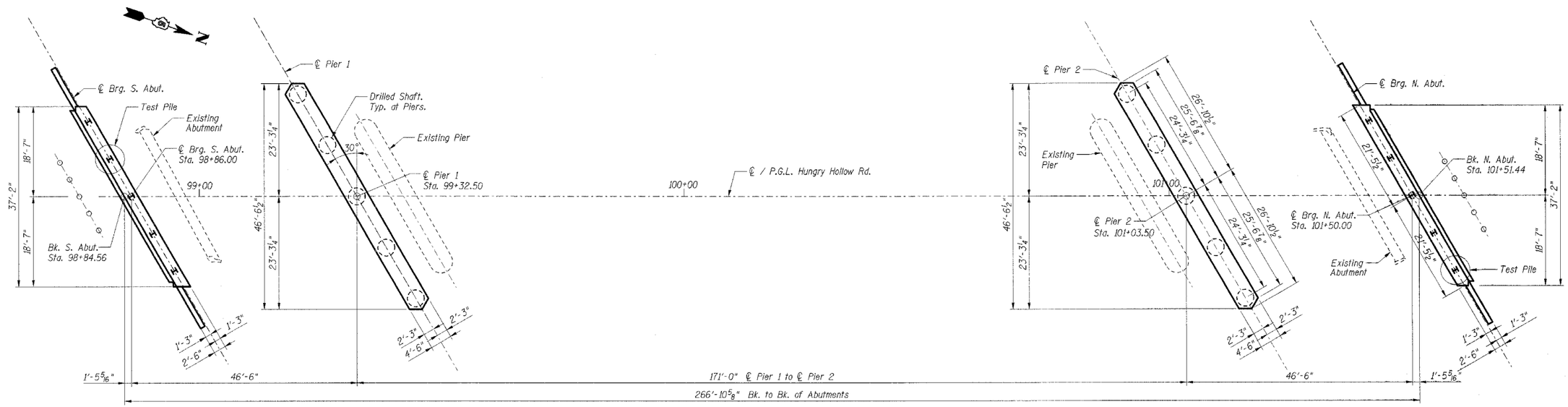

PLAN
SUBSTRUCTURE LAYOUT

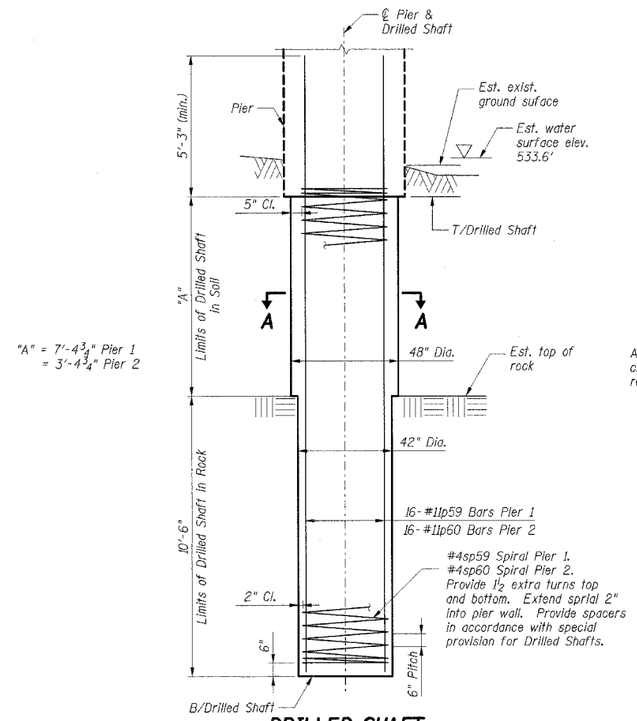

DRILLED SHAFT

TABLE OF ELEVATIONS

	Pier 1	Pier 2
T/Shaft	532.50	529.50
Est. Exist. Ground	532.60	531.60
Est. T/Rock	525.10	526.10

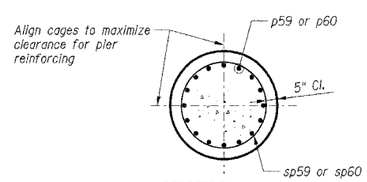

SECTION A-A

BAR LIST

	Bar	No.	Size	Length	Shape
	p59	80	#11	23'-0"	———
	p60	80	#11	19'-0"	———
**	sp59	5	#4	17'-7"	⋀⋀⋀⋀
**	sp60	5	#4	13'-7"	⋀⋀⋀⋀

** Length is height of spiral.

Notes:

1. Drilled shaft quantities are based on the top of shaft and the estimated top of rock elevations shown, and may change based on the actual top of rock encountered at each shaft and the final top of shaft elevation. See special provision for Drilled Shafts regarding changes to reinforcement.
2. Min. lap for spirals is 1½ turns. Weight of reinforcement bars given in Bill of Materials includes 2 spiral laps per drilled shaft.
3. Soil and groundwater conditions may necessitate the use of wet or cased construction techniques. See boring logs and special provision for Drilled Shafts.
4. Concrete strength for drilled shafts shall be in accordance with special provision for Drilled Shafts.
5. For pile layout at abutments, see Shts. S-32 and S-33.

BILL OF MATERIALS

Item	Unit	Total
Drilled Shaft in Soil 48"	Ft	54
Drilled Shaft in Rock 42"	Ft	105
Reinforcement Bars	Lbs	20,320
Furnishing Steel Piles HP12x53	Ft	192
Driving Steel Piles	Ft	192
Test Pile Steel HP12x53	Each	2
Metal Shoes	Each	8

SHT. S-06 OF 40

REVISIONS	
NAME	DATE

CITY OF DANVILLE, ILLINOIS
HUNGRY HOLLOW ROAD BRIDGE

SUBSTRUCTURE LAYOUT & DRILLED SHAFT DETAILS

SCALE:
DATE 12/06/05
DRAWN BY TCU
CHECKED BY JRH

TENG
TENG & ASSOCIATES, INC.
ENGINEERS/ARCHITECTS/PLANNERS
205 N. MICHIGAN AVE. CHICAGO, IL 60601
TELEPHONE: 312/616-0600

ROSSPF
..\GPE00P7X.DGN,..\TTB00029.DGN,..\SBL00P70.DGN,..\SBL00P80.DGN
12-07-2005,13:25:58
S:\DOCUMENT\02336902\STRUCTMGN\SBL00P80.DGN

FAU RTE	SECTION	COUNTY	TOTAL SHEETS	SHEET NO.
7000	02-00212-00-BR	VERMILION	59	22
FROM STA. 96+00.00		TO STA. 103+10.10		
FED. ROAD DIST. NO.	ILLINOIS	FED. AID PROJECT		

CONTRACT NO. 91285

Beam 1

Location	Station	Offset	Theoretical Grade Elevations	Theoretical Grade Elevations Adjusted For Dead Load Deflection
Bk S. Abut.	98+75.704	-15.333	555.337	
℄ Brg. S. Abut.	98+77.147	-15.333	555.319	555.319
a	98+81.574	-15.333	555.264	555.280
b	98+86.000	-15.333	555.208	555.240
c	98+90.426	-15.333	555.153	555.197
d	98+94.853	-15.333	555.098	555.149
e	99+01.730	-15.333	555.011	555.066
f	99+08.608	-15.333	554.925	554.970
g	99+15.485	-15.333	554.839	554.865
℄ Brg. Pier 1	99+22.362	-15.333	554.753	554.753
℄ Pier 1	99+23.647	-15.333	554.737	

Beam 1

Location	Station	Offset	Theoretical Grade Elevations	Theoretical Grade Elevations Adjusted For Dead Load Deflection
℄ Pier 2	100+94.647	-15.333	552.597	
℄ Brg. Pier 2	100+95.933	-15.333	552.581	552.581
l	101+00.359	-15.333	552.526	552.543
m	101+04.785	-15.333	552.470	552.502
n	101+09.211	-15.333	552.415	552.459
o	101+13.638	-15.333	552.360	552.411
p	101+20.515	-15.333	552.274	552.328
q	101+27.392	-15.333	552.188	552.232
r	101+34.270	-15.333	552.102	552.127
℄ Brg. N. Abut.	101+41.147	-15.333	552.015	552.015
Bk. N. Abut.	101+42.591	-15.333	551.997	

Beam 2

Location	Station	Offset	Theoretical Grade Elevations	Theoretical Grade Elevations Adjusted For Dead Load Deflection
Bk. S. Abut.	98+80.130	-7.667	555.435	
℄ Brg. S. Abut.	98+81.574	-7.667	555.417	555.417
b	98+86.000	-7.667	555.362	555.378
c	98+90.426	-7.667	555.306	555.338
d	98+94.853	-7.667	555.251	555.295
e	99+01.730	-7.667	555.165	555.219
f	99+08.608	-7.667	555.079	555.131
g	99+15.485	-7.667	554.993	555.032
h	99+22.362	-7.667	554.907	554.923
℄ Brg. Pier 1	99+26.789	-7.667	554.851	554.851
℄ Pier 1	99+28.074	-7.667	554.835	

Beam 2

Location	Station	Offset	Theoretical Grade Elevations	Theoretical Grade Elevations Adjusted For Dead Load Deflection
℄ Pier 2	100+99.074	-7.667	552.695	
℄ Brg. Pier 2	101+00.359	-7.667	552.679	552.679
m	101+04.785	-7.667	552.624	552.641
n	101+09.213	-7.667	552.568	552.600
o	101+13.638	-7.667	552.513	552.557
p	101+20.515	-7.667	552.427	552.481
q	101+27.393	-7.667	552.341	552.393
r	101+34.270	-7.667	552.255	552.294
s	101+41.147	-7.667	552.169	552.186
℄ Brg. N. Abut.	101+45.574	-7.667	552.113	552.113
Bk. N. Abut.	101+41.017	-7.667	552.170	

Beam 3

Location	Station	Offset	Theoretical Grade Elevations	Theoretical Grade Elevations Adjusted For Dead Load Deflection
Bk. S. Abut.	98+84.557	0.000	555.533	
℄ Brg. S. Abut.	98+86.000	0.000	555.515	555.515
c	98+90.426	0.000	555.460	555.476
d	98+94.853	0.000	555.404	555.436
e	99+01.730	0.000	555.318	555.367
f	99+08.608	0.000	555.232	555.287
g	99+15.485	0.000	555.146	555.195
h	99+22.362	0.000	555.060	555.092
i	99+26.789	0.000	555.005	555.021
℄ Brg. Pier 1	99+31.215	0.000	554.949	554.949
℄ Pier 1	99+32.500	0.000	554.933	

Beam 3

Location	Station	Offset	Theoretical Grade Elevations	Theoretical Grade Elevations Adjusted For Dead Load Deflection
℄ Pier 2	101+03.500	0.000	552.793	
℄ Brg. Pier 2	101+04.785	0.000	552.777	552.777
n	101+09.211	0.000	552.722	552.739
o	101+13.638	0.000	552.666	552.698
p	101+20.515	0.000	552.580	552.629
q	101+27.393	0.000	552.494	552.549
r	101+34.270	0.000	552.408	552.457
s	101+41.147	0.000	552.322	552.354
t	101+45.574	0.000	552.267	552.284
℄ Brg. N. Abut.	101+50.000	0.000	552.211	552.211
Bk. N. Abut.	101+51.443	0.000	552.193	

Beam 4

Location	Station	Offset	Theoretical Grade Elevations	Theoretical Grade Elevations Adjusted For Dead Load Deflection
Bk. S. Abut.	98+88.983	7.667	555.324	
℄ Brg. S. Abut.	98+90.426	7.667	555.306	555.306
d	98+94.853	7.667	555.251	555.268
e	99+01.730	7.667	555.165	555.204
f	99+08.608	7.667	555.079	555.131
g	99+15.485	7.667	554.993	555.046
h	99+22.362	7.667	554.907	554.950
i	99+26.789	7.667	554.851	554.883
j	99+31.215	7.667	554.796	554.813
℄ Brg. Pier 1	99+35.641	7.667	554.740	554.740
℄ Pier 1	99+36.926	7.667	554.724	

Beam 4

Location	Station	Offset	Theoretical Grade Elevations	Theoretical Grade Elevations Adjusted For Dead Load Deflection
℄ Pier 2	101+07.927	7.667	552.585	
℄ Brg. Pier 2	101+09.213	7.667	552.568	552.568
o	101+13.638	7.667	552.513	552.530
p	101+20.515	7.667	552.427	552.466
q	101+27.393	7.667	552.341	552.393
r	101+34.270	7.667	552.255	552.309
s	101+41.147	7.667	552.169	552.213
t	101+45.574	7.667	552.113	552.145
u	101+50.000	7.667	552.058	552.075
℄ Brg. N. Abut.	101+54.426	7.667	552.003	552.003
Bk. N. Abut.	101+55.870	7.667	551.985	

Beam 5

Location	Station	Offset	Theoretical Grade Elevations	Theoretical Grade Elevations Adjusted For Dead Load Deflection
Bk. S. Abut.	98+93.409	15.333	555.116	
℄ Brg. S. Abut.	98+94.853	15.333	555.098	555.098
e	99+01.730	15.333	555.011	555.037
f	99+08.608	15.333	554.925	554.970
g	99+15.485	15.333	554.839	554.893
h	99+22.362	15.333	554.753	554.805
i	99+26.789	15.333	554.698	554.742
j	99+31.215	15.333	554.642	554.674
k	99+35.641	15.333	554.587	554.604
℄ Brg. Pier 1	99+40.068	15.333	554.532	554.532
℄ Pier 1	99+41.353	15.333	554.516	

Beam 5

Location	Station	Offset	Theoretical Grade Elevations	Theoretical Grade Elevations Adjusted For Dead Load Deflection
℄ Pier 2	101+12.353	15.333	552.376	
℄ Brg. Pier 2	101+13.638	15.333	552.360	552.360
p	101+20.515	15.333	552.274	552.299
q	101+27.393	15.333	552.188	552.232
r	101+34.270	15.333	552.102	552.156
s	101+41.147	15.333	552.015	552.067
t	101+45.574	15.333	551.960	552.004
u	101+50.000	15.333	551.905	551.937
v	101+54.426	15.333	551.849	551.866
℄ Brg. N. Abut.	101+58.853	15.333	551.794	551.794
Bk. N. Abut.	101+60.296	15.333	551.776	

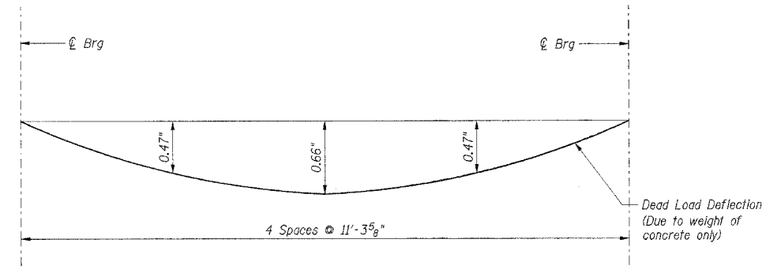

DEFLECTION DIAGRAM

Note: The above deflections are not to be used in the field if the engineer is working from the grade elevations adjusted for dead load deflections as shown at left.

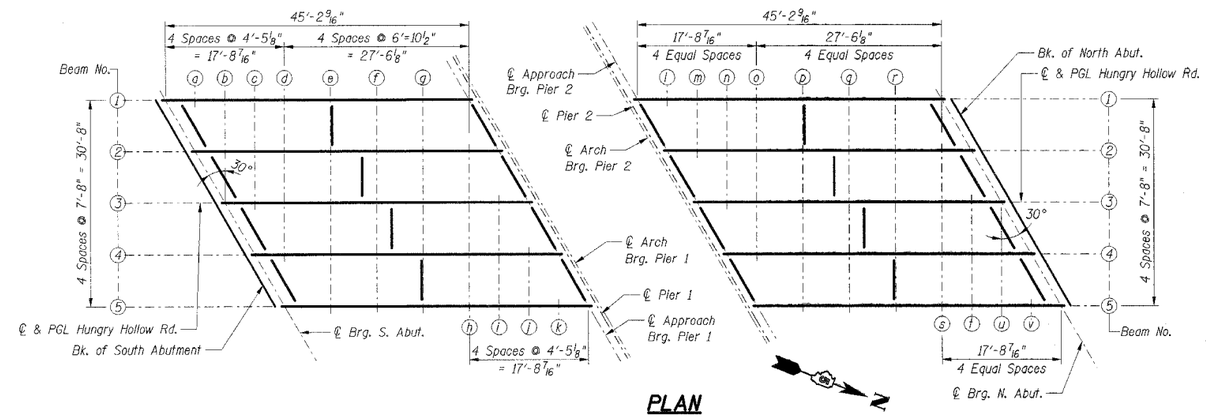

PLAN

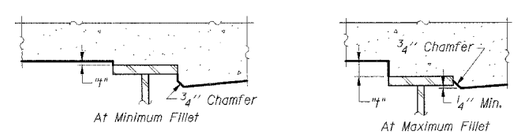

To determine "t": After all structural steel has been erected, elevations of the top flanges of the beams shall be taken at intervals shown above. These elevations subtracted from the "Theoretical Grade Elevations Adjusted for Dead Load Deflection" shown at left, minus slab thickness, equals the fillet heights "t" above top flange of beams.

FILLET HEIGHTS

Notes:
1. Offsets & Elevations are given in Feet.
2. Negative offsets are "Left." Positive Offsets are "Right"

SHT. S-07 OF 40

REVISIONS	
NAME	DATE

CITY OF DANVILLE, ILLINOIS
HUNGRY HOLLOW ROAD BRIDGE

TOP OF DECK ELEVATIONS
APPROACH SPANS

SCALE:
DATE 12/06/05
DRAWN BY LAR
CHECKED BY JRH

TENG
TENG & ASSOCIATES, INC.
ENGINEERS/ARCHITECTS/PLANNERS
205 N. MICHIGAN AVE. CHICAGO, IL 60601
TELEPHONE 312/565-4500

..\FRPOOP5Y.DGN,..\TTB0062S.DGN,..\FRPOOF5Y.DGN
12-07-2005,13:25:57
S:\DOCUMENT\02336802\STRUCT\DGN\UNEGOPB.DGN
ROSSPF

FAU RTE	SECTION	COUNTY	TOTAL SHEETS	SHEET NO.
7000	02-00212-00-BR	VERMILION	59	23
FROM STA. 96+00.00		TO STA. 103+10.10		
FED. ROAD DIST. NO.	ILLINOIS	FED. AID PROJECT		

CONTRACT NO. 91285

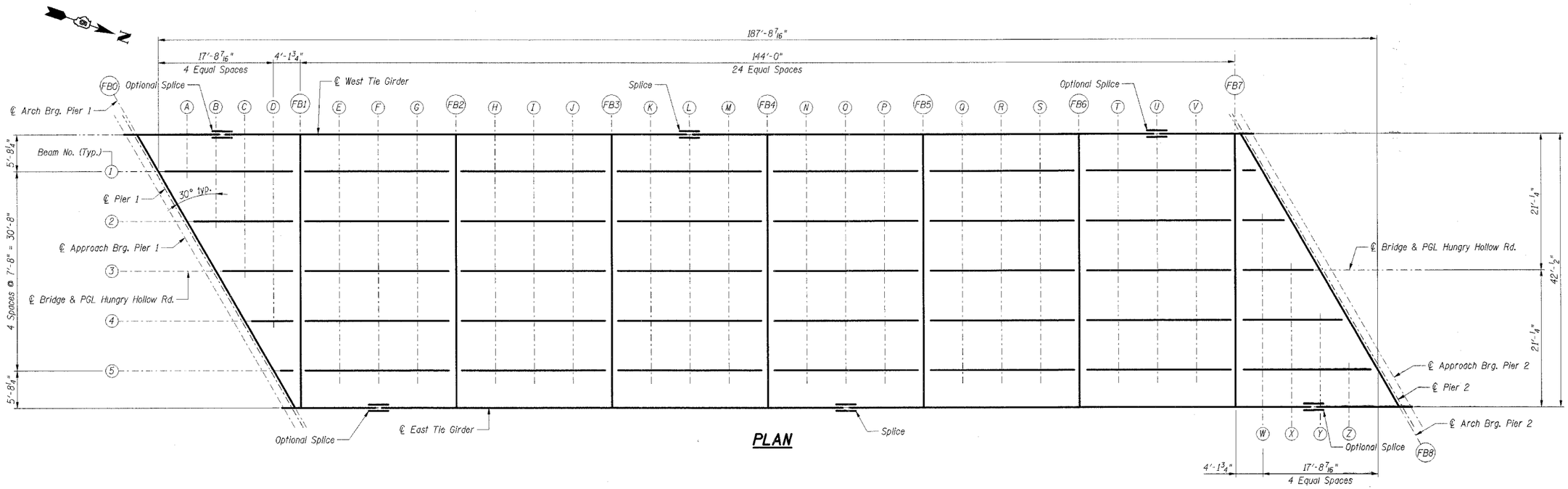

PLAN

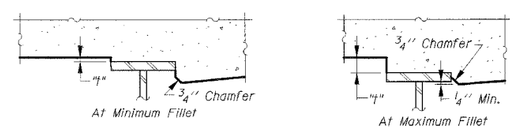

To determine "t": After all structural steel has been erected, elevations of the top flanges of the beams shall be taken at intervals shown above. These elevations subtracted from the "Theoretical Grade Elevations Adjusted for Dead Load Deflection" shown on Sht. S-09, minus slab thickness, equals the fillet heights "t" above top flange of beams.

FILLET HEIGHTS

Notes:

1. Work this sheet with Sht. S-09.

SHT. S-08 OF 40

REVISIONS	
NAME	DATE

CITY OF DANVILLE, ILLINOIS
HUNGRY HOLLOW ROAD BRIDGE

TOP OF DECK ELEVATIONS
MAIN SPAN - I

SCALE:
DATE 12/06/05
DRAWN BY LAR
CHECKED BY JRH

TENG

TENG & ASSOCIATES, INC.
ENGINEERS/ARCHITECTS/PLANNERS
205 N. MICHIGAN AVE. CHICAGO, IL 60601
TELEPHONE 312/616-1600

ROSSPF

..\TTB0002LDGN, ..\FRP00F5V.DGN
12-07-2005, 13:25:56
S:\DOCUMENT\02236902\STRUCT\DGN\OKEOOPR2.DGN

FAU RTE	SECTION	COUNTY	TOTAL SHEETS	SHEET NO.
7000	02-00212-00-BR	VERMILION	59	24
FROM STA. 96+00.00		TO STA. 103+10.10		
FED. ROAD DIST. NO.	ILLINOIS	FED. AID PROJECT		

CONTRACT NO. 91285

Beam 1

Location	Station	Offset	Theoretical Grade Elevations	Theoretical Grade Elevations Adjusted For Dead Load Deflection
FB0	99+24.15	-15.33	554.73	554.74
A	99+28.57	-15.33	554.68	554.69
B	99+33.00	-15.33	554.62	554.64
C	99+37.43	-15.33	554.56	554.59
D	99+41.85	-15.33	554.51	554.53
FB1	99+46.00	-15.33	554.46	554.48
E	99+52.00	-15.33	554.38	554.43
F	99+58.00	-15.33	554.31	554.36
G	99+64.00	-15.33	554.23	554.29
FB2	99+70.00	-15.33	554.16	554.21
H	99+76.00	-15.33	554.08	554.15
I	99+82.00	-15.33	554.01	554.08
J	99+88.00	-15.33	553.93	554.01
FB3	99+94.00	-15.33	553.86	553.93
K	100+00.00	-15.33	553.78	553.87
L	100+06.00	-15.33	553.71	553.80
M	100+12.00	-15.33	553.63	553.72
FB4	100+18.00	-15.33	553.56	553.64
N	100+24.00	-15.33	553.48	553.57
O	100+30.00	-15.33	553.41	553.50
P	100+36.00	-15.33	553.33	553.42
FB5	100+42.00	-15.33	553.26	553.33
Q	100+48.00	-15.33	553.18	553.26
R	100+54.00	-15.33	553.11	553.18
S	100+60.00	-15.33	553.03	553.10
FB6	100+66.00	-15.33	552.96	553.01
T	100+72.00	-15.33	552.88	552.94
U	100+78.00	-15.33	552.81	552.86
V	100+84.00	-15.33	552.73	552.77
FB7	100+90.00	-15.33	552.66	552.68
FB8	100+94.15	-15.33	552.60	552.61

Beam 2

Location	Station	Offset	Theoretical Grade Elevations	Theoretical Grade Elevations Adjusted For Dead Load Deflection
FB0	99+28.57	-7.67	554.83	554.85
B	99+33.00	-7.67	554.77	554.81
C	99+37.43	-7.67	554.72	554.76
D	99+41.85	-7.67	554.66	554.70
FB1	99+46.00	-7.67	554.61	554.66
E	99+52.00	-7.67	554.54	554.61
F	99+58.00	-7.67	554.46	554.55
G	99+64.00	-7.67	554.39	554.48
FB2	99+70.00	-7.67	554.31	554.40
H	99+76.00	-7.67	554.24	554.34
I	99+82.00	-7.67	554.16	554.28
J	99+88.00	-7.67	554.09	554.20
FB3	99+94.00	-7.67	554.01	554.12
K	100+00.00	-7.67	553.94	554.06
L	100+06.00	-7.67	553.86	553.99
M	100+12.00	-7.67	553.78	553.91
FB4	100+18.00	-7.67	553.71	553.82
N	100+24.00	-7.67	553.63	553.76
O	100+30.00	-7.67	553.56	553.69
P	100+36.00	-7.67	553.48	553.61
FB5	100+42.00	-7.67	553.41	553.52
Q	100+48.00	-7.67	553.33	553.45
R	100+54.00	-7.67	553.26	553.38
S	100+60.00	-7.67	553.18	553.29
FB6	100+66.00	-7.67	553.11	553.20
T	100+72.00	-7.67	553.03	553.13
U	100+78.00	-7.67	552.96	553.05
V	100+84.00	-7.67	552.88	552.95
FB7	100+90.00	-7.67	552.81	552.85
W	100+94.15	-7.67	552.76	552.79
FB8	100+98.57	-7.67	552.70	552.73

Beam 3

Location	Station	Offset	Theoretical Grade Elevations	Theoretical Grade Elevations Adjusted For Dead Load Deflection
FB0	99+33.00	0.00	554.93	554.96
C	99+37.43	0.00	554.87	554.91
D	99+41.85	0.00	554.82	554.86
FB1	99+46.00	0.00	554.76	554.82
E	99+52.00	0.00	554.69	554.77
F	99+58.00	0.00	554.61	554.71
G	99+64.00	0.00	554.54	554.64
FB2	99+70.00	0.00	554.46	554.56
H	99+76.00	0.00	554.39	554.51
I	99+82.00	0.00	554.31	554.44
J	99+88.00	0.00	554.24	554.37
FB3	99+94.00	0.00	554.16	554.28
K	100+00.00	0.00	554.09	554.22
L	100+06.00	0.00	554.01	554.16
M	100+12.00	0.00	553.94	554.08
FB4	100+18.00	0.00	553.86	553.99
N	100+24.00	0.00	553.79	553.93
O	100+30.00	0.00	553.71	553.85
P	100+36.00	0.00	553.64	553.77
FB5	100+42.00	0.00	553.56	553.68
Q	100+48.00	0.00	553.49	553.62
R	100+54.00	0.00	553.41	553.54
S	100+60.00	0.00	553.34	553.46
FB6	100+66.00	0.00	553.26	553.36
T	100+72.00	0.00	553.19	553.29
U	100+78.00	0.00	553.11	553.21
V	100+84.00	0.00	553.04	553.12
FB7	100+90.00	0.00	552.96	553.02
W	100+94.15	0.00	552.91	552.95
X	100+98.57	0.00	552.85	552.89
FB8	101+03.00	0.00	552.80	552.83

Beam 4

Location	Station	Offset	Theoretical Grade Elevations	Theoretical Grade Elevations Adjusted For Dead Load Deflection
FB0	99+37.43	7.67	554.72	554.74
D	99+41.85	7.67	554.66	554.70
FB1	99+46.00	7.67	554.61	554.65
E	99+52.00	7.67	554.54	554.61
F	99+58.00	7.67	554.46	554.55
G	99+64.00	7.67	554.39	554.48
FB2	99+70.00	7.67	554.31	554.40
H	99+76.00	7.67	554.24	554.34
I	99+82.00	7.67	554.16	554.28
J	99+88.00	7.67	554.09	554.20
FB3	99+94.00	7.67	554.01	554.12
K	100+00.00	7.67	553.94	554.06
L	100+06.00	7.67	553.86	553.99
M	100+12.00	7.67	553.78	553.91
FB4	100+18.00	7.67	553.71	553.82
N	100+24.00	7.67	553.63	553.76
O	100+30.00	7.67	553.56	553.69
P	100+36.00	7.67	553.48	553.61
FB5	100+42.00	7.67	553.41	553.51
Q	100+48.00	7.67	553.33	553.45
R	100+54.00	7.67	553.26	553.38
S	100+60.00	7.67	553.18	553.29
FB6	100+66.00	7.67	553.11	553.19
T	100+72.00	7.67	553.03	553.13
U	100+78.00	7.67	552.96	553.05
V	100+84.00	7.67	552.88	552.96
FB7	100+90.00	7.67	552.81	552.85
W	100+94.15	7.67	552.76	552.80
X	100+98.57	7.67	552.70	552.74
Y	101+00.00	7.67	552.68	552.72
FB8	101+07.43	7.67	552.59	552.61

Beam 5

Location	Station	Offset	Theoretical Grade Elevations	Theoretical Grade Elevations Adjusted For Dead Load Deflection
FB0	99+41.85	15.33	554.51	554.52
FB1	99+46.00	15.33	554.46	554.48
E	99+52.00	15.33	554.38	554.42
F	99+58.00	15.33	554.31	554.36
G	99+64.00	15.33	554.23	554.29
FB2	99+70.00	15.33	554.16	554.21
H	99+76.00	15.33	554.08	554.15
I	99+82.00	15.33	554.01	554.09
J	99+88.00	15.33	553.93	554.01
FB3	99+94.00	15.33	553.86	553.93
K	100+00.00	15.33	553.78	553.87
L	100+06.00	15.33	553.71	553.80
M	100+12.00	15.33	553.63	553.72
FB4	100+18.00	15.33	553.56	553.63
N	100+24.00	15.33	553.48	553.57
O	100+30.00	15.33	553.41	553.50
P	100+36.00	15.33	553.33	553.41
FB5	100+42.00	15.33	553.26	553.33
Q	100+48.00	15.33	553.18	553.26
R	100+54.00	15.33	553.11	553.18
S	100+60.00	15.33	553.03	553.10
FB6	100+66.00	15.33	552.96	553.01
T	100+72.00	15.33	552.88	552.94
U	100+78.00	15.33	552.81	552.86
V	100+84.00	15.33	552.73	552.77
FB7	100+90.00	15.33	552.66	552.68
W	100+94.15	15.33	552.60	552.63
X	100+98.57	15.33	552.55	552.57
Y	101+00.00	15.33	552.53	552.56
Z	101+07.43	15.33	552.44	552.46
FB8	101+11.85	15.33	552.38	552.39

Notes:

1. Work this sheet with Sht. S-08.
2. Elevations shown correspond to the top of concrete deck and do not include FWS.

SHT. S-09 OF 40

REVISIONS	
NAME	DATE

CITY OF DANVILLE, ILLINOIS
HUNGRY HOLLOW ROAD BRIDGE

TOP OF DECK ELEVATIONS
MAIN SPAN - II

SCALE:
DATE 12/06/05
DRAWN BY LAR
CHECKED BY JRH

TENG

TENG & ASSOCIATES, INC.
ENGINEERS/ARCHITECTS/PLANNERS
205 N. MICHIGAN AVE. CHICAGO, IL 60601
TELEPHONE 312/616-0600

..\TTB0007G.DGN
12-07-2005, 13:25
S:\DOCUMENT\02336902\STRUCT\DGN\NEC00PB7.DGN
ROSSPF

FAU RTE	SECTION	COUNTY	TOTAL SHEETS	SHEET NO.
7000	02-00212-00-BR	VERMILION	59	25
FROM STA. 96+00.00		TO STA. 103+10.10		
FED. ROAD DIST. NO.	ILLINOIS	FED. AID PROJECT		

CONTRACT NO. 91285

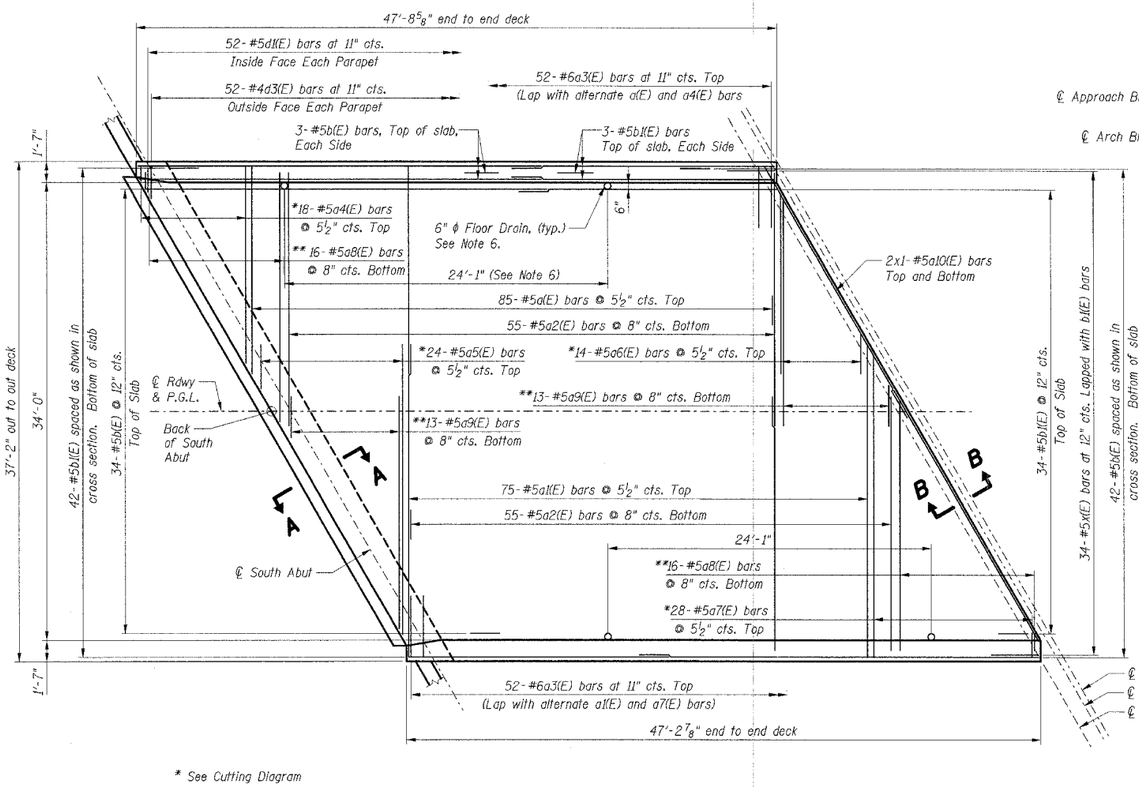

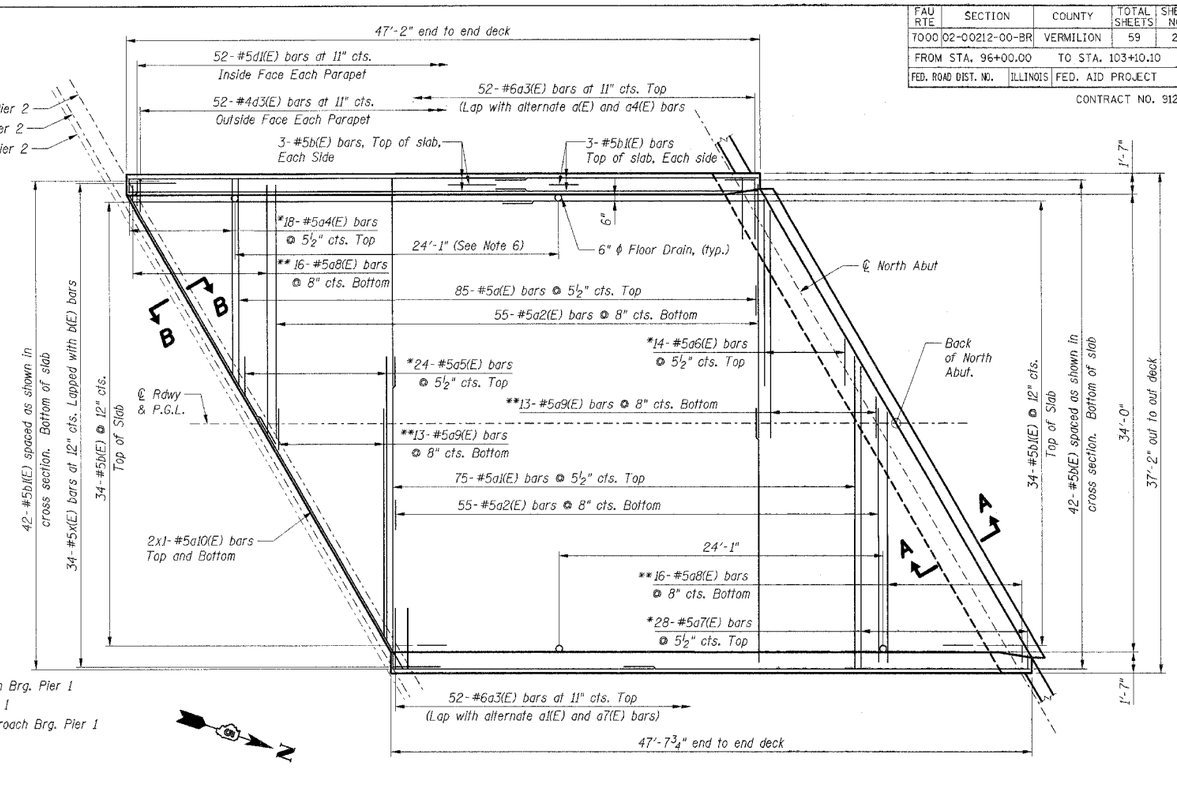

* See Cutting Diagram

** Order a8(E), a9(E) bars full length Cut to fit skew and use reminder of bars in opposite end.

DECK PLAN

Bar Cutting Diagram

Bar	N Bars	A	B	C	D	E
a4(E)	9	15'-1"	14'-7"	1'-1"	8'-3"	7'-5"
a5(E)	12	24'-11"	21'-7"	3'-4"	12'-10"	12'-1"
a6(E)	7	17'-2"	13'-9"	3'-5"	9'-0"	8'-2"
a7(E)	14	23'-6"	22'-6"	1'-0"	12'-2"	11'-4"

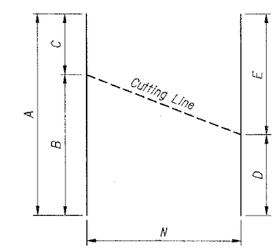

FIELD CUTTING DIAGRAM

Order bars full length and cut as shown.

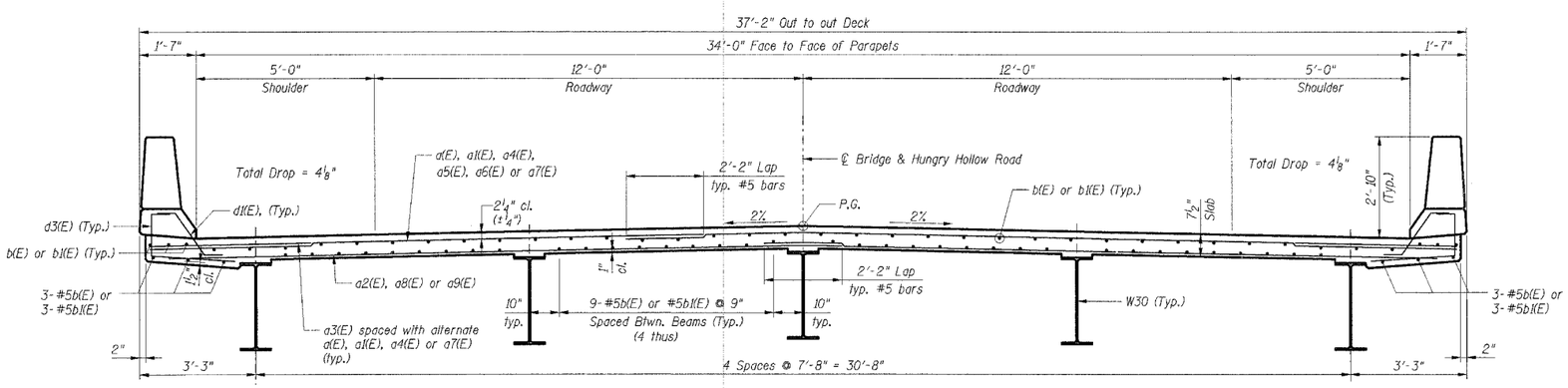

CROSS SECTION

Notes:

1. Reinforcement bars designated (E) shall be epoxy coated
2. Bars indicated thus 20x3-#5 etc. indicates 20 lines of bars with 3 lengths per line.
3. For Parapet reinforcement and Bill of Material, see Sht. S-12.
4. For Section A-A, see Sht. S-34.
5. For Section B-B, see Sht. S-12.
6. For Drain Details, see Sht. S-12.

SHT. S-10 OF 40

REVISIONS	
NAME	DATE

CITY OF DANVILLE, ILLINOIS
HUNGRY HOLLOW ROAD BRIDGE

DECK PLAN & CROSS SECTION
APPROACH SPANS

SCALE:
DATE 12/06/05
DRAWN BY LAR
CHECKED BY JRH

TENG
TENG & ASSOCIATES, INC.
ENGINEERS AND ARCHITECTS PLANNERS
205 N. MICHIGAN AVE. CHICAGO, IL 60601
TELEPHONE 312.616.1000

ROSSPF

..\GFEDOOP7X.DGN,..\GFEDOOP7X.DGN,..\TTB00029.DGN,..\DKF00P88.DGN,..\FRP00P5Y.DGN
12-07-2005, 15:25:54
S:\DOCUMENT\02336902\STRUCT\DGN\DKF00P88.DGN

FAU RTE	SECTION	COUNTY	TOTAL SHEETS	SHEET NO.
7000	02-00212-00-BR	VERMILION	59	26
FROM STA. 96+00.00		TO STA. 103+10.10		
FED. ROAD DIST. NO.	ILLINOIS	FED. AID PROJECT		

CONTRACT NO. 91285

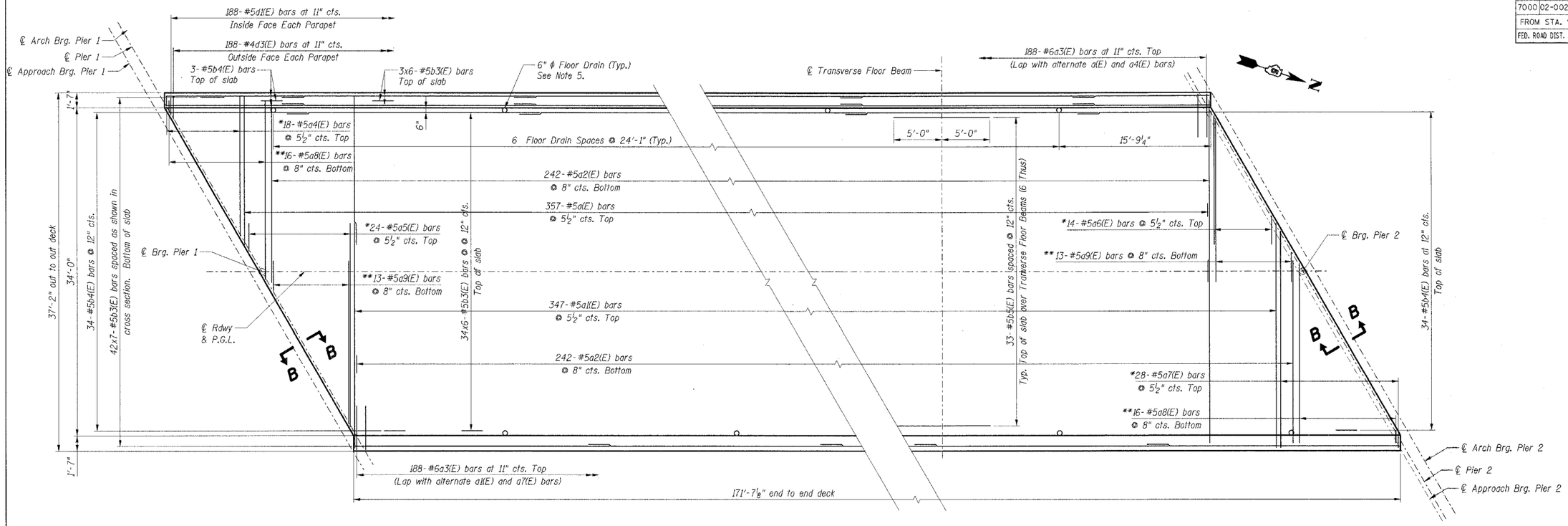

* See Cutting Diagram on this Sheet.

** Order a8(E) and a9(E) bars full length Cut to fit skew and use reminder of bars in opposite end.

PLAN

Bar Cutting Diagram

Bar	N Bars	A	B	C	D	E
a4(E)	9	15'-1"	14'-7"	1'-1"	8'-3"	7'-5"
a5(E)	12	24'-11"	21'-7"	3'-4"	12'-10"	12'-1"
a6(E)	7	17'-2"	13'-9"	3'-5"	9'-0"	8'-2"
a7(E)	14	23'-6"	22'-6"	1'-0"	12'-2"	11'-4"

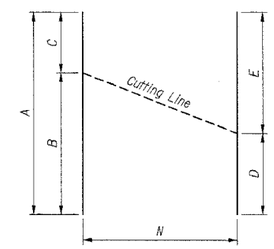

FIELD CUTTING DIAGRAM

Order bars full length and cut as shown.

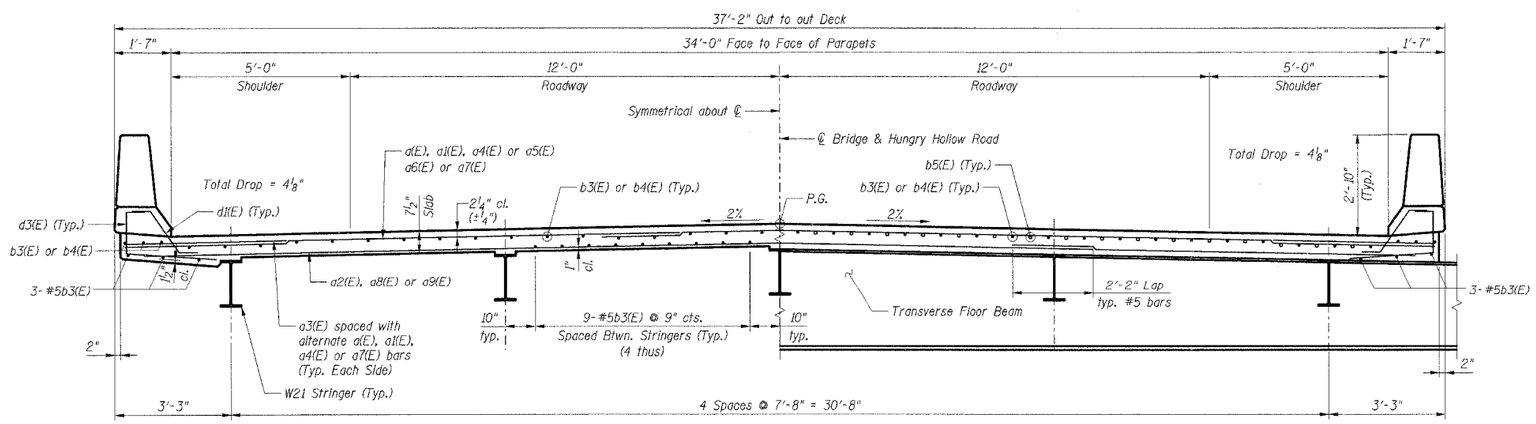

BETWEEN TRANSVERSE FLOOR BEAMS **AT TRANSVERSE FLOOR BEAMS**

CROSS SECTION

Notes:

1. Reinforcement bars designated (E) shall be epoxy coated
2. Bars indicated thus 20x3-#5 etc. indicates 20 lines of bars with 3 lengths per line.
3. For Parapet Reinforcement and Bill of Material, see Sht. S-13.
4. For Section B-B, see Sheet S-12.
5. For Drain Details, see Sht. S-12.

SHT. S-11 OF 40

REVISIONS	
NAME	DATE

CITY OF DANVILLE, ILLINOIS
HUNGRY HOLLOW ROAD BRIDGE

DECK PLAN & CROSS SECTION
MAIN SPAN

SCALE: DRAWN BY LAR
DATE 12/06/05 CHECKED BY JRH

TENG

TENG & ASSOCIATES, INC.
ENGINEERS/ARCHITECTS/PLANNERS
205 N. MICHIGAN AVE. CHICAGO, IL 60601
TELEPHONE 312/616-1000

ROSSPF

..\GPED0PF7X.DGN,..\TTB0002S.DGN,..\FPP00PSY.DGN,..\GPED0PF7X.DGN,..\DXP00PB9.DGN
12-07-2005,13:32:53 S:\DOCUMENT\02336902\STRUCT\DGN\DEP00PB9.DGN

FAU RTE	SECTION	COUNTY	TOTAL SHEETS	SHEET NO.
7000	02-00212-00-BR	VERMILION	59	27
FROM STA. 96+00.00		TO STA. 103+10.10		
FED. ROAD DIST. NO.	ILLINOIS	FED. AID PROJECT		

CONTRACT NO. 91285

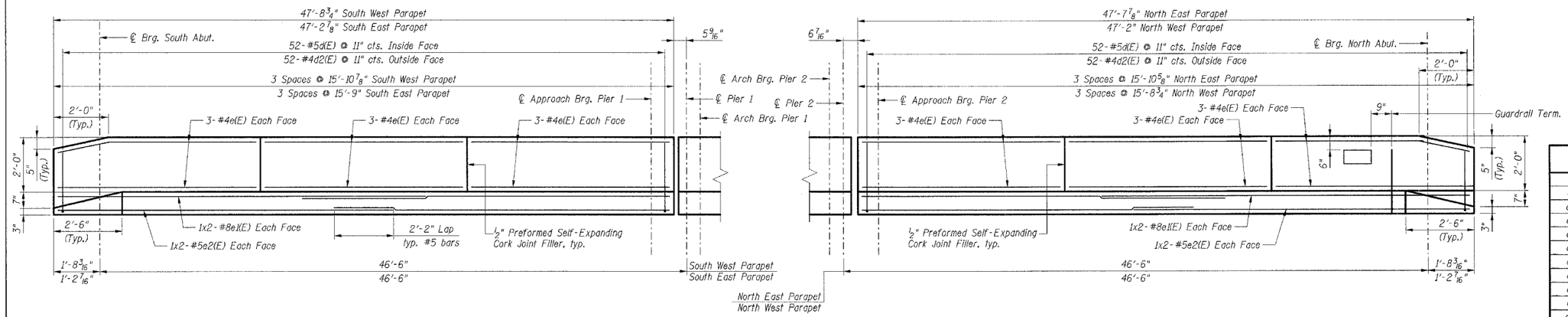

INSIDE ELEVATION OF PARAPET

(West shown, East similar)

BAR LIST

(Both Approach Spans)

Bar	No.	Size	Length	Shape
a(E)	170	#5	15'-5"	——
a1(E)	150	#5	23'-3"	——
a2(E)	220	#5	18'-10"	——
a3(E)	208	#6	4'-6"	——
a4(E)	18	#5	15'-1"	——
a5(E)	24	#5	24'-11"	——
a6(E)	14	#5	17'-2"	——
a7(E)	28	#5	23'-6"	——
a8(E)	32	#5	19'-10"	——
a9(E)	26	#5	19'-11"	——
a10(E)	8	#5	21'-6"	——
m(E)	10	#6	27'-3"	——
m1(E)	10	#6	18'-4"	——
m2(E)	12	#6	11'-8"	——
m3(E)	8	#6	9'-5"	——
m4(E)	8	#6	9'-5"	——
m5(E)	4	#6	3'-6"	——
b(E)	164	#5	30'-0"	——
b1(E)	164	#5	19'-8"	——
d(E)	208	#5	3'-0"	
d1(E)	208	#5	2'-5"	
d2(E)	208	#4	3'-0"	
d3(E)	208	#4	4'-0"	
e(E)	72	#4	15'-7"	——
e1(E)	16	#8	25'-11"	——
e2(E)	16	#5	24'-9"	——
s4(E)	84	#4	9'-0"	
s5(E)	84	#5	5'-6"	
v(E)	88	#5	3'-3"	
x(E)	68	#5	4'-1"	

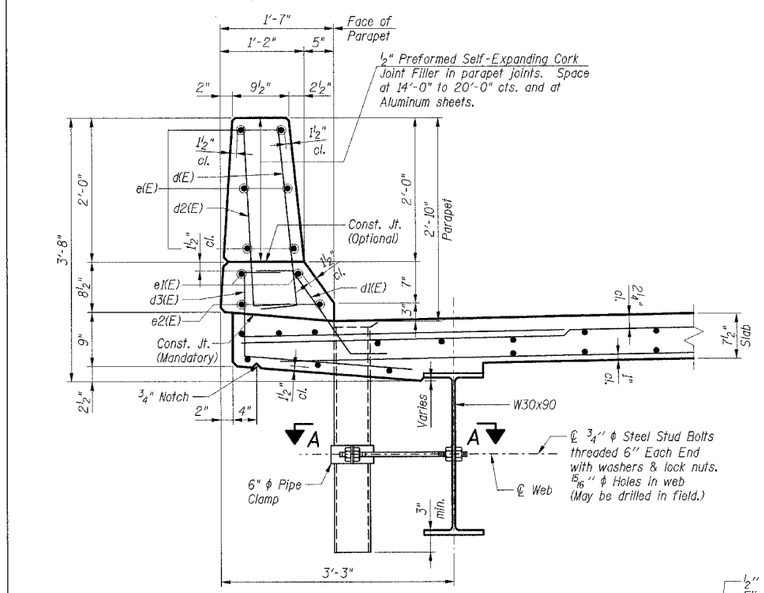

SECTION THRU PARAPET

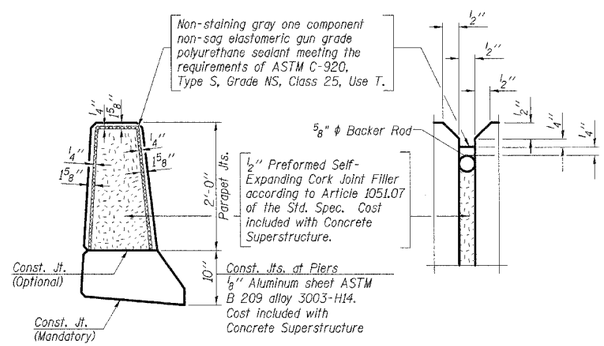

PARAPET JOINT DETAILS

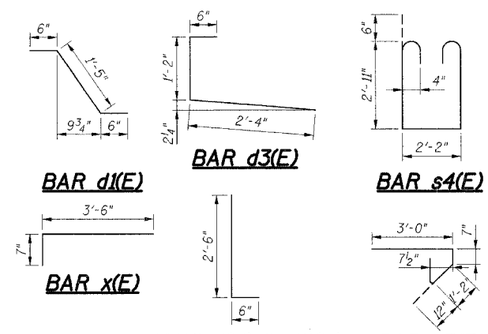

BAR d1(E) BAR d3(E) BAR s4(E) BAR x(E) BARS d(E) & d2(E) BAR s5(E)

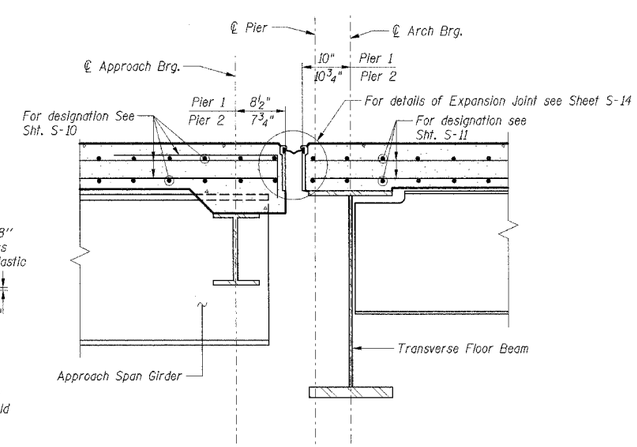

SECTION B-B

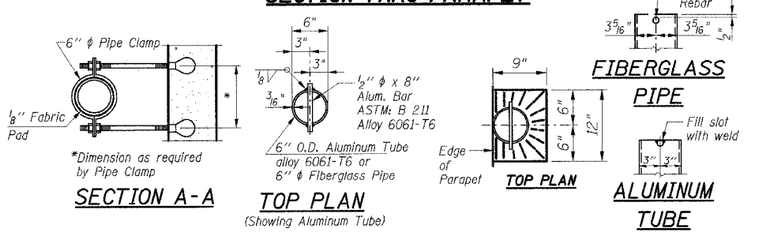

SECTION A-A TOP PLAN (Showing Aluminum Tube) TOP PLAN FIBERGLASS PIPE ALUMINUM TUBE

BILL OF MATERIAL

Item	Unit	Total
Concrete Superstructure	Cu Yd	130.3
Reinforcement Bars, Epoxy Coated	Lbs	30,950
Floor Drains	Each	8
Bridge Deck Grooving	Sq Yd	356
Protective Coat	Sq Yd	356

Notes:
1. Reinforcement bars designated (E) shall be epoxy coated
2. Bars indicated thur 1x2-#5 etc. indicates 1 line of bars with 2 lengths per line.
3. Work this sheet with sheet S-34.

SHT. S-12 OF 40

REVISIONS NAME	DATE

CITY OF DANVILLE, ILLINOIS
HUNGRY HOLLOW ROAD BRIDGE

PARAPET ELEVATIONS & DETAILS
APPROACH SPANS

SCALE: DRAWN BY LAR
DATE 12/06/05 CHECKED BY JRH

TENG
TENG & ASSOCIATES, INC.
ENGINEERS•ARCHITECTS•PLANNERS
205 N. MICHIGAN AVE. CHICAGO, IL 60601
TELEPHONE: 312/616-0000

..\TB0002SUDN,..\SUD00P8A.DGN
12-07-2005,13:25:52
S:\DOCUMENT\02336902\STRUCT\DGN\SUD00P8A.DGN
RKSSPF

FAU RTE	SECTION	COUNTY	TOTAL SHEETS	SHEET NO.
7000	02-00212-00-BR	VERMILION	59	28
FROM STA. 96+00.00		TO STA. 103+10.10		
FED. ROAD DIST. NO.	ILLINOIS	FED. AID PROJECT		

CONTRACT NO. 91285

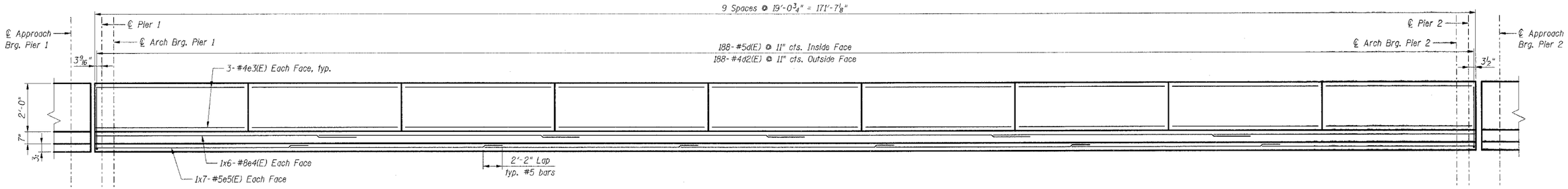

INSIDE ELEVATION OF PARAPET

(West shown, East similar)

BAR LIST

(Main Span)

Bar	No.	Size	Length	Shape
a(E)	357	#5	15'-5"	——
a1(E)	347	#5	23'-3"	——
a2(E)	484	#5	18'-10"	——
a3(E)	376	#6	4'-6"	——
a4(E)	9	#5	15'-1"	——
a5(E)	12	#5	24'-11"	——
a6(E)	7	#5	17'-2"	——
a7(E)	14	#5	23'-6"	——
a8(E)	16	#5	19'-10"	——
a9(E)	13	#5	19'-11"	——
b3(E)	534	#5	30'-0"	——
b4(E)	80	#5	19'-8"	——
b5(E)	198	#5	10'-0"	——
d(E)	376	#5	3'-0"	——
d1(E)	376	#5	2'-5"	——
d2(E)	376	#4	3'-0"	——
d3(E)	376	#4	4'-0"	——
e3(E)	108	#4	18'-9"	——
e4(E)	24	#8	32'-4"	——
e5(E)	28	#5	26'-4"	——

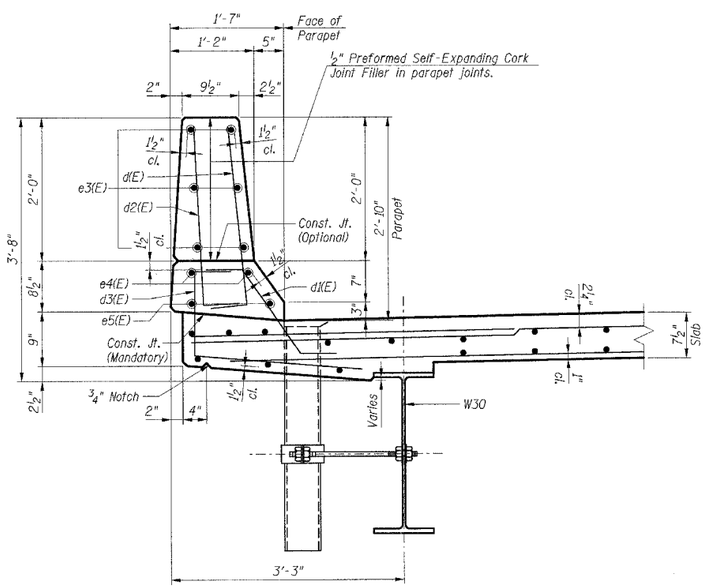

SECTION THRU PARAPET

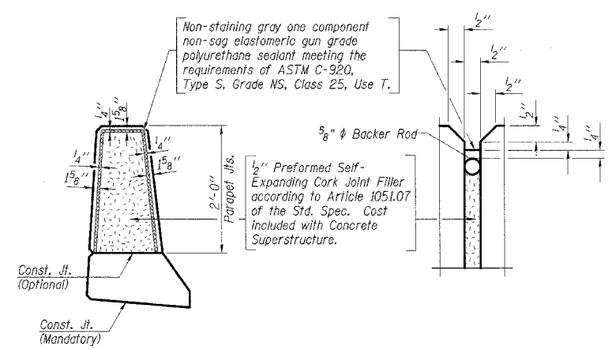

PARAPET JOINT DETAILS

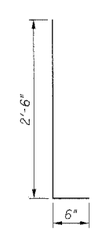

BARS d(E) & d2(E)

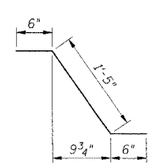

BAR d1(E)

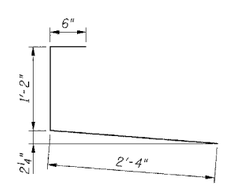

BAR d3(E)

BILL OF MATERIAL

Item	Unit	Total
Concrete Superstructure	Cu Yd	190.2
Reinforcement Bars, Epoxy Coated	Lbs	56,220
Floor Drains	Each	14
Bridge Deck Grooving	Sq Yd	648
Protective Coat	Sq Yd	648

Notes:

1. Reinforcement bars designated (E) shall be epoxy coated
2. Bars indicated thur 1x2-#5 etc. indicates 1 line of bars with 2 lengths per line.
3. For Drain Details, see Sht. S-12.

SHT. S-13 OF 40

REVISIONS	
NAME	DATE

CITY OF DANVILLE, ILLINOIS
HUNGRY HOLLOW ROAD BRIDGE

PARAPET ELEVATIONS & DETAILS
MAIN SPAN

SCALE:
DATE 12/06/05
DRAWN BY LAR
CHECKED BY JRH

TENG

TENG & ASSOCIATES, INC.
ENGINEERS AND ARCHITECTS/PLANNERS
205 N. MICHIGAN AVE. CHICAGO, IL 60601
TELEPHONE: 312/616-0600

..\SLDOOP-P3.DGN,..\TTB0002F9.DGN
12-07-2005,13:21:52
S:\DOCUMENT\02336902\STRUCT\DGN\SLDOOP-P3.DGN

ROSSPF

FAU RTE.	SECTION	COUNTY	TOTAL SHEETS	SHEET NO.
7000	02-00212-00-BR	VERMILION	59	29
FROM STA. 96+00.00		TO STA. 103+10.10		
FED. ROAD DIST. NO.	ILLINOIS	FED. AID PROJECT		

CONTRACT NO. 91285

Required Strip Seal rated movement	"A"	Location
1"	$1\frac{1}{8}$"	Pier 2
2"	$1\frac{3}{4}$"	Pier 1

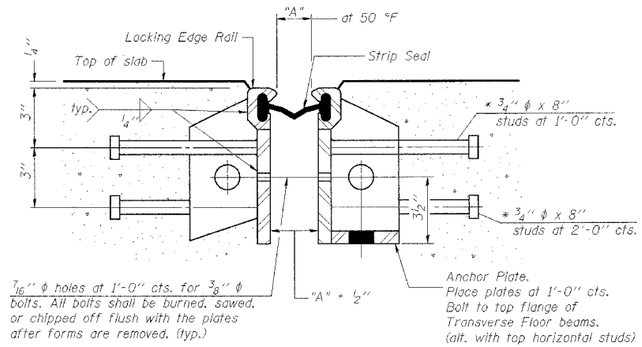

GENERAL NOTES

The strip seal shall be made continuous and shall have a minimum thickness of $\frac{1}{4}$". The configuration of the strip seal shall match the configuration of the Locking Edge Rails.

The height and thickness of the Locking Edge Rails shown are minimum dimensions. The actual configuration of the Locking Edge Rails and matching strip seal may vary from manufacturer to manufacturer. Flanged edge rails will not be allowed.

Locking Edge Rails may be spliced at slope discontinuities and stage construction joints.

The manufacturer's recommended installation methods shall be followed.

The joint opening and deck dimensions detailed on the superstructure are based on a preformed joint seal. If the contractor elects to use the alternate strip seal joint, the opening and deck dimensions shall be modified according to the dimensions detailed on this sheet. Required modifications shall be made at no additional cost to the State.

* Granular or solid flux filled headed studs conforming to Article 1006.32 of the Std. Specs., automatically end welded.

SECTION THRU WELDED RAIL EXP. JOINT

(Studs Required)
(Anchor Plates Required)

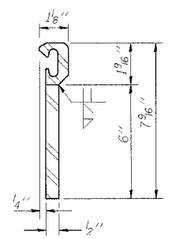

WELDED RAIL

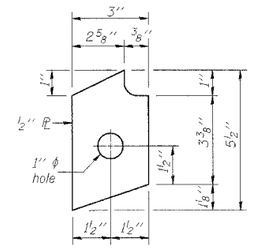

ANCHOR ℄ AT APPROACH SPAN

(for welded rail)

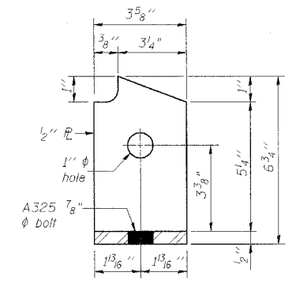

ANCHOR ℄ AT MAIN SPAN

(for welded rail)

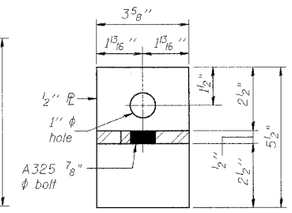

LOCKING EDGE RAILS

EXPANSION JOINT SETTING TABLE - 2" JOINT

(JOINT MANUFACTURER TO VERIFY - SEE SPECIFICATION)

Setting Temperature	"A"
40 °F	$1\frac{7}{8}$"
50 °F	$1\frac{3}{4}$"
60 °F	$1\frac{5}{8}$"
70 °F	$1\frac{1}{2}$"
80 °F	$1\frac{3}{8}$"
90 °F	$1\frac{1}{4}$"

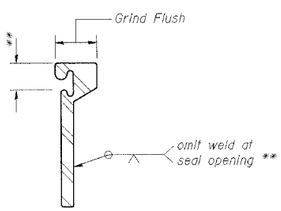

LOCKING EDGE RAIL SPLICE

The inside of the locking edge rail groove shall be free of weld residue.

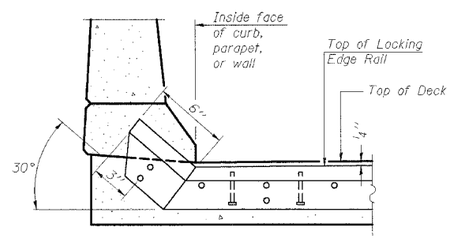

AT CURB, PARAPET, OR WALL

TYPICAL END TREATMENTS

BILL OF MATERIAL

Item	Unit	Total
Bridge Joint System Expansion - 1"	Ft	40
Bridge Joint System Expansion - 2"	Ft	40

SHT. S-14 OF 40

REVISIONS	
NAME	DATE

CITY OF DANVILLE, ILLINOIS
HUNGRY HOLLOW ROAD BRIDGE

EXPANSION JOINT DETAILS

SCALE:
DATE 12/06/05
DRAWN BY LAR
CHECKED BY JRH

TENG
TENG & ASSOCIATES, INC.
ENGINEERING/ARCHITECTURE/PLANNERS
225 N. MICHIGAN AVE. CHICAGO, IL 60601
TELEPHONE: 312/616-0000

..\TTB00029.DGN
12-07-2005, 15:25
S:\DOCUMENT\02336902\STRUCT\DGN\EJ000F8B.DGN
ROSSPF

FAU RTE	SECTION	COUNTY	TOTAL SHEETS	SHEET NO.
7000	02-00212-00-BR	VERMILION	59	30
FROM STA. 96+00.00		TO STA. 103+10.10		
FED. ROAD DIST. NO.	ILLINOIS	FED. AID PROJECT		

CONTRACT NO. 91285

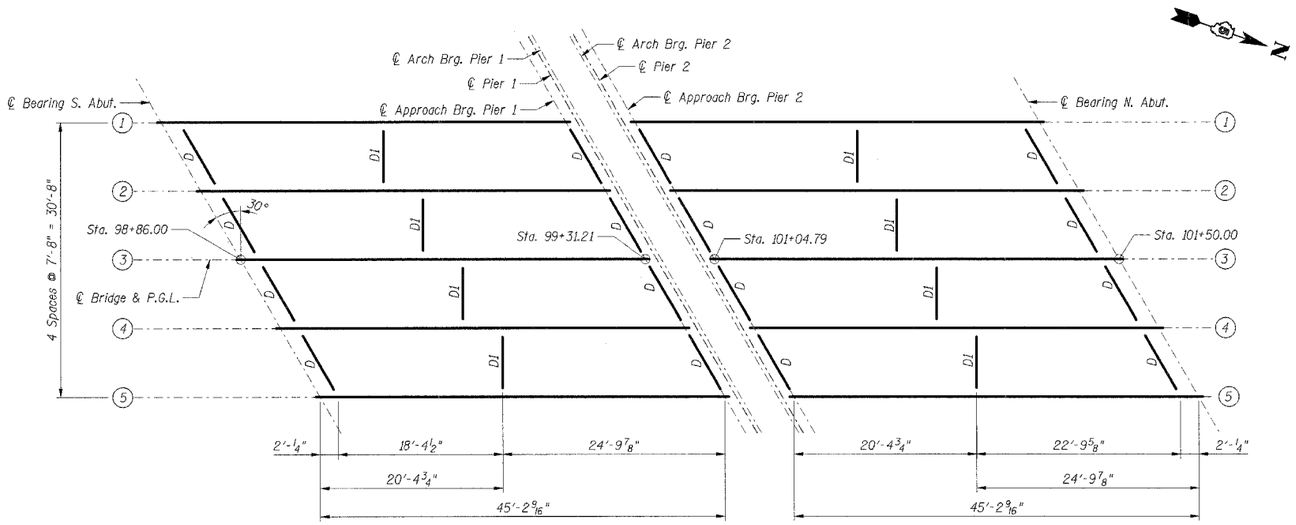

FRAMING PLAN - APPROACH SPANS

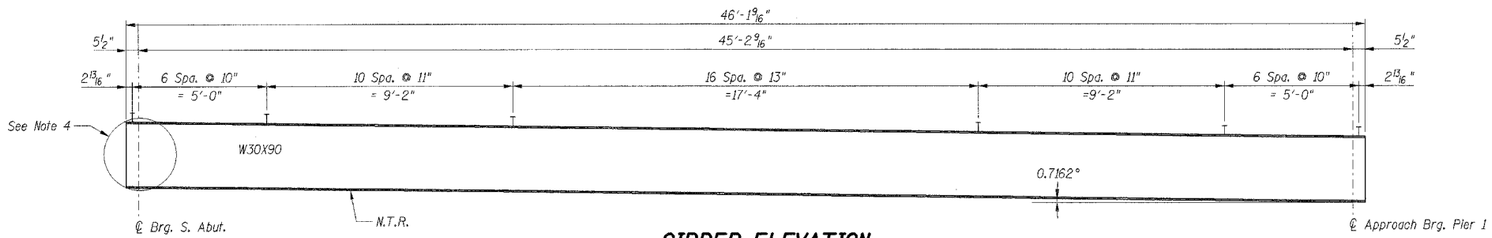

GIRDER ELEVATION

(APPROACH SPAN 1 GIRDER SHOWN. APPROACH SPAN 3 GIRDER OPPOSITE HAND)

Notes:
1. Members designated N.T.R. shall conform to the Supplemental Requirements for Notch Toughness (Zone 2).
2. For limits of painting see General Notes on Sheet S-03.
3. For weights of structural steel see General Notes on Sheet S-03.
4. Holes thru web for Abutment Diaphragm reinforcement, see Sheet S-34.

TOP OF BEAM ELEVATIONS

(For Fabrication only)

BEAM	LOCATION			
	℄ Brg S. Abut.	℄ S. Appr. Brg.	℄ N. Appr. Brg.	℄ Brg N. Abut.
1	554.652	554.087	551.915	551.349
2	554.750	554.185	552.013	551.447
3	554.848	554.282	552.110	551.545
4	554.584	554.074	551.902	551.336
5	554.431	553.865	551.693	551.127

INTERIOR GIRDER MOMENT TABLE		
		Midspan
Is	(in4)	3610
Ic(n)	(in4)	11387
Ic(3n)	(in4)	8610
Ss	(in3)	245
Sc(n)	(in3)	390
Sc(3n)	(in3)	355
Z	(in3)	283
DL	(k-ft)	0.833
MDL	(k-ft)	213
sDL	(k-ft)	0.520
MsDL	(k-ft)	133
MsLL	(k-ft)	378
M (Imp)	(k-ft)	111
5/3(MLL + I)	(k-ft)	815
Ma	(k-ft)	1509
Mu	(k-ft)	2017
fsDL non-comp	(k.s.i.)	10.4
fsDL comp	(k.s.i.)	4.5
fs5/3(LL+I)	(k.s.i.)	25.1
fs (Overload)	(k.s.i.)	40.0
fs (Total)	(k.s.i.)	
VR	(k)	55.9

INTERIOR GIRDER REACTION TABLE		
		W. Abut.
RDL	(k)	30.6
RLL	(k)	43.3
Imp.	(k)	16.2
R (Total)	(k)	90.1

Is and Ss are the moment of inertia and section modulus of the steel section used in computing fs (Total & Overload).

Ic and Sc are the moment of inertia and section modulus of the composite section used in computing fs (Total & Overload).

VR is the maximum Live Load + Impact shear range in span.

Z is the plastic section modulus used to determine the fully plastic moments in the non-composite areas.

Ma (Applied Moment)=1.3[MDL + MsDL + 5/3(MLL + I)].

Mu is the Full Plastic Moment Capacity for Compact, Braced section.

fs (Overload) is the sum of the stresses due to MDL + MsDL + 5/3(MLL + I).

fs (Total) (Non-compact section) is the sum of the stresses due to 1.3[MDL + MsDL + 5/3(MLL + I)].

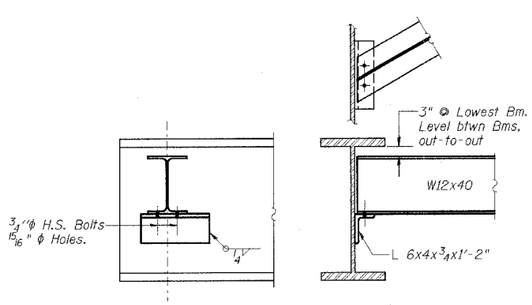

DIAPHRAGM D

16 Required

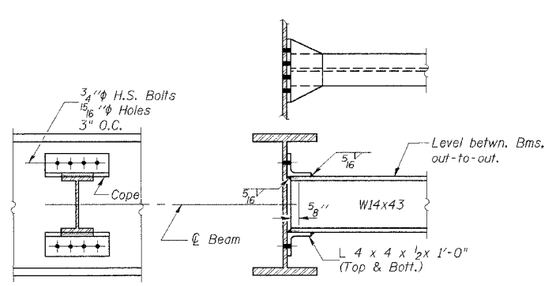

DIAPHRAGM D1

8 Required

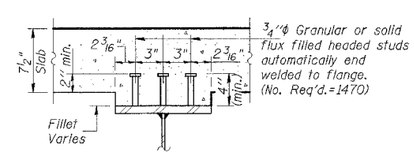

STUD DETAIL

BILL OF MATERIAL

(Two Approach Spans)

Item	Unit	Quantity
Furnishing and Erecting Structural Steel	L Sum	1
Stud Shear Connectors	Each	1470

SHT. S-15 OF 40

REVISIONS	
NAME	DATE

CITY OF DANVILLE, ILLINOIS
HUNGRY HOLLOW ROAD BRIDGE

STRUCTURAL STEEL FRAMING PLAN & DETAILS APPROACH SPANS

SCALE: DRAWN BY LAR

DATE 12/06/05 CHECKED BY JRH

TENG

TENG & ASSOCIATES, INC.
ENGINEERS/ARCHITECTS/PLANNERS
205 N. MICHIGAN AVE. CHICAGO, IL 60601
TELEPHONE: 312-616-0600

R05SPF

..\FRP00P5Y.DGN ..\FRP00P5Y.DGN ..\TTB00029.DGN ..\GFE00P7X.DGN ..\FRP00P9L.DGN
12-07-2005, 13:52:50 S:\DOCUMENT\02336902\STRUCT\DGN\FRP00P9L.DGN

FAU RTE	SECTION	COUNTY	TOTAL SHEETS	SHEET NO.
7000	02-00212-00-BR	VERMILION	59	31
FROM STA. 96+00.00		TO STA. 103+10.10		
FED. ROAD DIST. NO.	ILLINOIS	FED. AID PROJECT		

CONTRACT NO. 91285

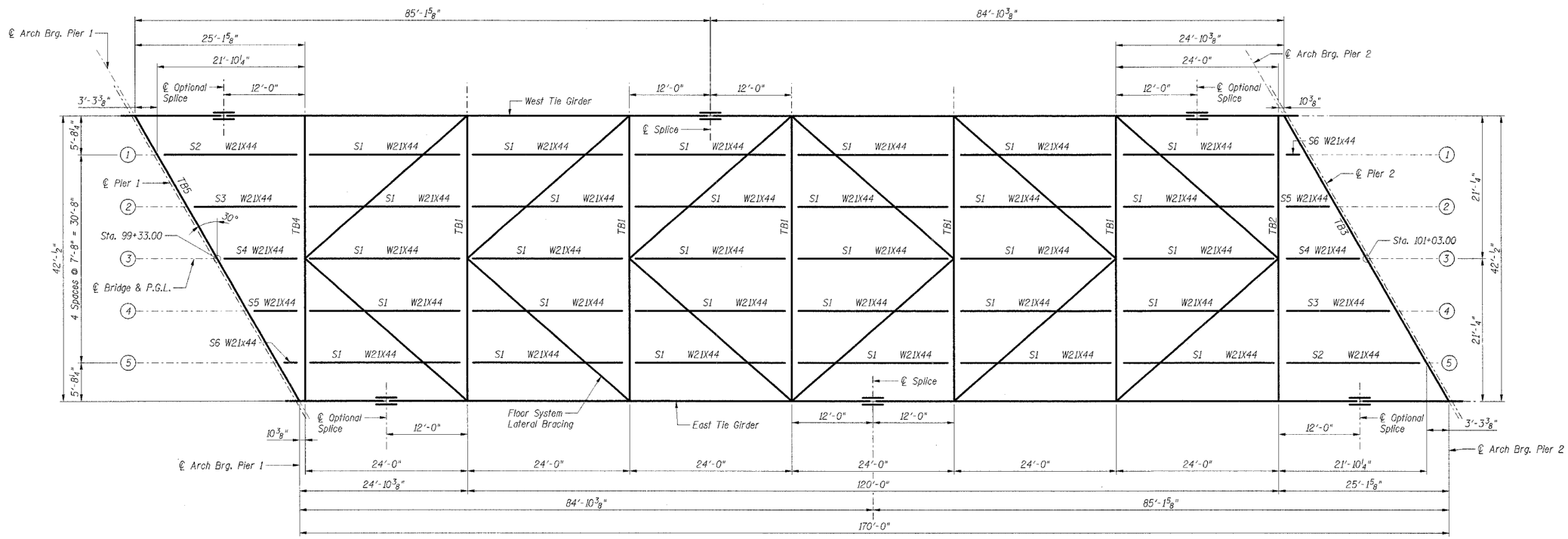

FRAMING PLAN - MAIN SPAN

Notes:
1. Members designated N.T.R. shall conform to the Supplemental Requirements for Notch Toughness (Zone 2).
2. For limits of painting see General Notes on Sheet S-03.
3. For weights of structural steel see General Notes on Sheet S-03.

SHT. S-16 OF 40

REVISIONS	
NAME	DATE

CITY OF DANVILLE, ILLINOIS
HUNGRY HOLLOW ROAD BRIDGE

STRUCTURAL STEEL FRAMING PLAN & DETAILS MAIN SPAN

SCALE:
DATE 12/06/05
DRAWN BY LAR
CHECKED BY JRH

TENG
TENG & ASSOCIATES, INC.
ENGINEERS/ARCHITECTS/PLANNERS
205 N. MICHIGAN AVE. CHICAGO, IL 60601
TELEPHONE 312/616-0600

..\FRPOOPSY.DGN,..\TTB00023.DGN
12-07-2005,13:12:49 S:\DOCUMENT\02336902\STRUCT\DGN\FRPOOPLE.DGN

RDSSPF

FAU RTE	SECTION	COUNTY	TOTAL SHEETS	SHEET NO.
7000	02-00212-00-BR	VERMILION	59	32
FROM STA. 96+00.00		TO STA. 103+10.10		
FED. ROAD DIST. NO.	ILLINOIS	FED. AID PROJECT		

CONTRACT NO. 91285

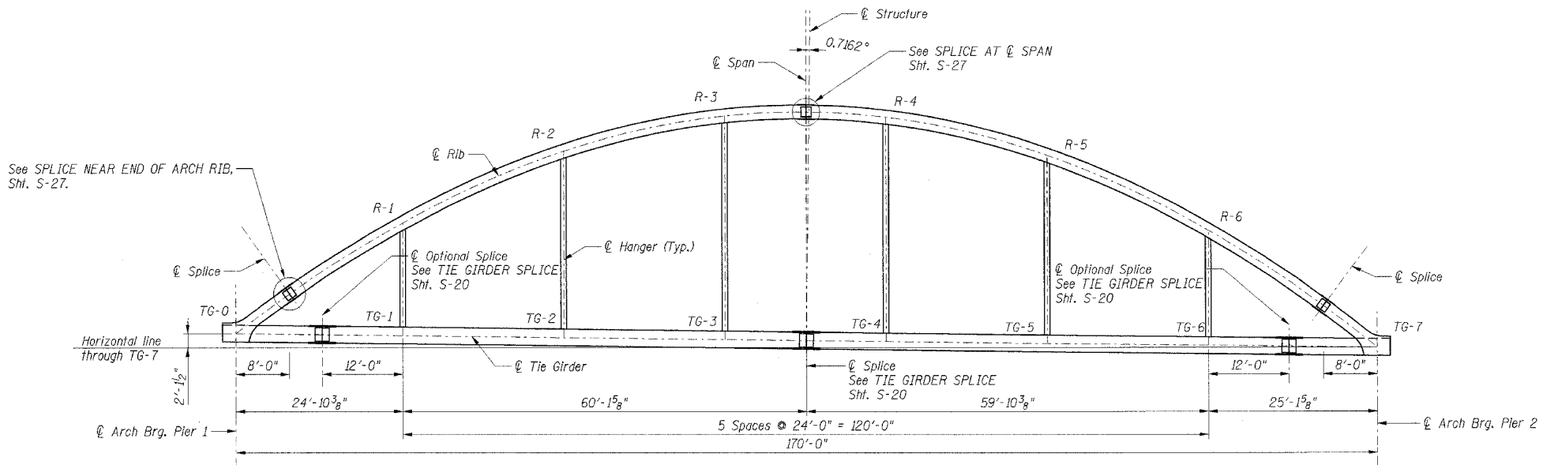

ARCH ELEVATION

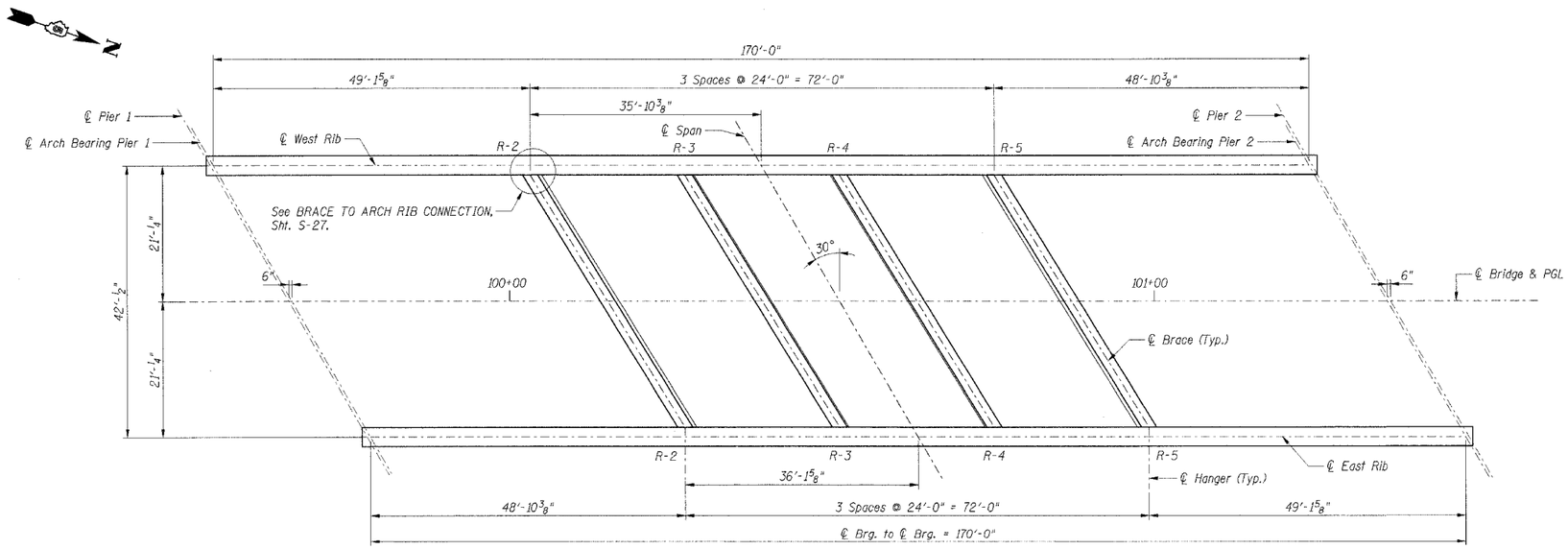

RIB BRACING PLAN

SHT. S-17 OF 40

REVISIONS	
NAME	DATE

CITY OF DANVILLE, ILLINOIS
HUNGRY HOLLOW ROAD BRIDGE

ARCH RIB ELEVATION & GEOMETRY - I

SCALE:
DRAWN BY RAM
DATE 12/06/05
CHECKED BY

TENG

TENG & ASSOCIATES, INC.
ENGINEERS/ARCHITECTS/PLANNERS
205 N. MICHIGAN AVE. CHICAGO, IL 60601
TELEPHONE 312/616-0600

..\TSL000TL.DGN,..\SBL00PT0.DGN,..\FRP00PSY.DGN,..\ALT00PB3.DGN,..\SL000PBH.DGN,..\TTB00029.DGN,..\OB000PRK.DGN
12-07-2005,13:29:48
S:\DOCUMENT\02336302\STRUCT\DGN\SUPO0PSF.DGN
ROSSPF

FAU RTE	SECTION	COUNTY	TOTAL SHEETS	SHEET NO.
7000	02-00212-00-BR	VERMILION	59	33
FROM STA. 96+00.00		TO STA. 103+10.10		
FED. ROAD DIST. NO.	ILLINOIS	FED. AID PROJECT		

CONTRACT NO. 91285

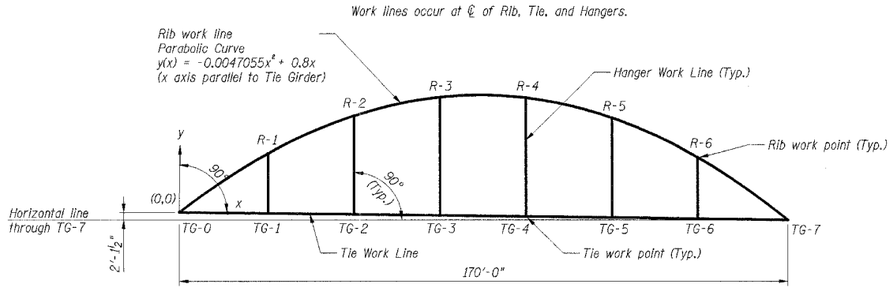

ARCH GEOMETRY

(Final geometric shape under dead load of steel and deck slab.)

ARCH THEORETICAL WORKING POINTS

W.P.	East Arch		West Arch	
	Station	Elevation	Station	Elevation
TG-0	99+45.14	552.34	99+20.86	552.64
TG-1	99+70.00	552.03	99+46.00	552.33
TG-2	99+94.00	551.73	99+70.00	552.03
TG-3	100+18.00	551.43	99+94.00	551.73
TG-4	100+42.00	551.13	100+18.00	551.43
TG-5	100+66.00	550.83	100+42.00	551.13
TG-6	100+90.00	550.53	100+66.00	550.83
TG-7	101+15.14	550.21	100+90.86	550.52
R-1	99+70.00	568.89	99+46.00	569.35
R-2	99+94.00	579.47	99+70.00	579.86
R-3	100+18.00	584.69	99+94.00	585.02
R-4	100+42.00	584.52	100+18.00	584.79
R-5	100+66.00	578.90	100+42.00	579.11
R-6	100+90.00	567.79	100+66.00	567.93

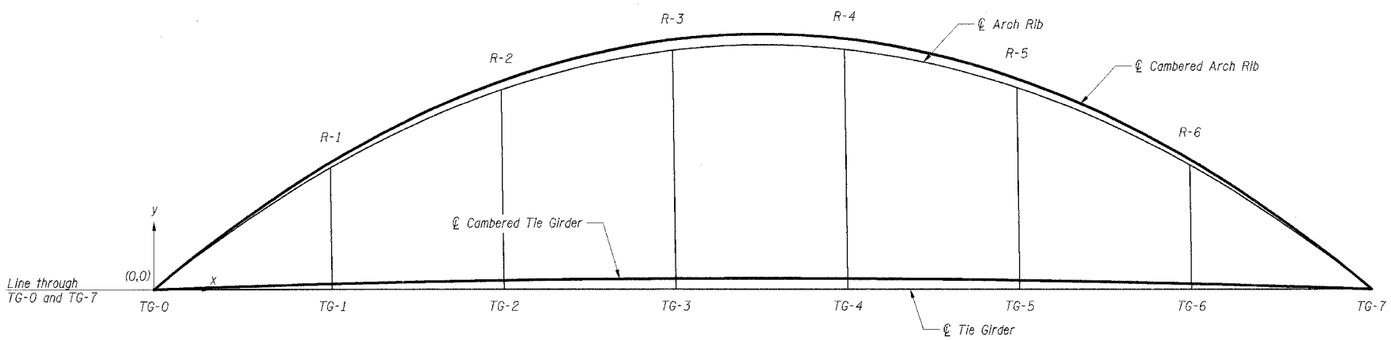

CAMBER DIAGRAM

DEAD LOAD DEFLECTIONS & CAMBER

W.P.	East Arch			West Arch		
	Steel D.L. (in.)	Steel D.L.+ Deck Slab D.L. (in.)	Camber (in.)	Steel D.L. (in.)	DL1+DL2 (w/out FWS) (in.)	Camber (in.)
TG-0	0.00	0.00	0.00	0.00	0.00	0.00
TG-1	-0.09	-0.32	0.32	-0.05	-0.08	0.08
TG-2	-0.19	-0.62	0.62	-0.15	-0.37	0.37
TG-3	-0.25	-0.74	0.74	-0.23	-0.65	0.65
TG-4	-0.23	-0.65	0.65	-0.25	-0.74	0.74
TG-5	-0.15	-0.37	0.37	-0.19	-0.62	0.62
TG-6	-0.05	-0.08	0.08	-0.09	-0.32	0.32
TG-7	0.00	0.00	0.00	0.00	0.00	0.00
R-1	-0.08	-0.29	0.29	-0.05	-0.05	0.05
R-2	-0.18	-0.57	0.57	-0.14	-0.32	0.32
R-3	-0.23	-0.68	0.68	-0.22	-0.59	0.59
R-4	-0.22	-0.59	0.59	-0.24	-0.68	0.68
R-5	-0.14	-0.32	0.32	-0.18	-0.57	0.57
R-6	-0.05	-0.05	0.05	-0.08	-0.29	0.29

RIB STRESS DATA TABLE

West Rib		TG-0	R-1	R-2	R-3	R-4	R-5	R-6	TG-7
East Rib		TG-7	R-6	R-5	R-4	R-3	R-2	R-1	TG-0
A	(in^2)	124.5	102.75	102.75	102.75	102.75	102.75	102.75	124.5
I_x	(in^4)	12320	11462	11462	11462	11462	11462	11462	12320
I_y	(in^4)	22074	15601	15601	15601	15601	15601	15601	22074
S_x	(in^3)	1027	955	955	955	955	955	955	1027
S_y	(in^3)	1226	867	867	867	867	867	867	1226
P_{DL}	(kips)	-547	-541	-495	-461	-467	-500	-550	-557
P_{LL}	(kips)	-47	-76	-79	-89	-85	-73	-61	-12
P_{Impact}	(kips)	-8	-13	-13	-15	-14	-12	-10	-2
P_{Total}	(kips)	-602	-630	-587	-566	-566	-586	-622	-571
M_{yDL}	(k-ft)	64	7	-50	-20	-67	-143	0	156
M_{yLL}	(k-ft)	128	-73	-116	-38	-33	27	45	161
$M_{yImpact}$	(k-ft)	22	-12	-20	-7	-6	5	8	27
M_{yTotal}	(k-ft)	213	-79	-186	-65	-105	-112	53	344
M_{xDL}	(k-ft)	162	33	196	285	301	276	186	169
M_{xLL}	(k-ft)	48	401	459	364	328	435	460	54
$M_{xImpact}$	(k-ft)	8	68	78	62	56	74	78	9
M_{xTotal}	(k-ft)	217	503	733	711	685	784	724	232
f_a	(ksi)	-4.84	-6.13	-5.72	-5.51	-5.51	-5.70	-6.05	-4.59
f_{by}	(ksi)	2.08	-1.10	-2.57	-0.89	-1.45	-1.55	0.73	3.37
f_{bx}	(ksi)	2.54	6.32	9.20	8.93	8.60	9.85	9.10	2.71
$f_a+f_{by}+f_{bx}$	(ksi)	9.46	13.54	17.49	15.33	15.57	17.10	15.88	10.66

TIE STRESS DATA TABLE

West Tie		TG-0	TG-1	TG-2	TG-3	TG-4	TG-5	TG-6	TG-7
East Tie		TG-7	TG-6	TG-5	TG-4	TG-3	TG-2	TG-1	TG-0
A	(in^2)	61.875	61.875	61.875	61.875	61.875	61.875	61.875	61.875
I_x	(in^4)	9905	9905	9905	9905	9905	9905	9905	9905
I_y	(in^4)	774	774	774	774	774	774	774	774
S_x	(in^3)	655	655	655	655	655	655	655	655
S_y	(in^3)	103	103	103	103	103	103	103	103
P_{DL}	(kips)	380	367	351	352	372	396	441	441
P_{LL}	(kips)	30	46	43	61	51	54	37	14
P_{Impact}	(kips)	5	8	7	10	9	9	6	2
P_{Total}	(kips)	415	420	402	423	432	459	485	457
M_{yDL}	(k-ft)	31	12	-7	-2	-11	14	42	-73
M_{yLL}	(k-ft)	14	2	-1	0	-1	2	7	-40
$M_{yImpact}$	(k-ft)	2	0	0	0	0	0	1	-7
M_{yTotal}	(k-ft)	-47	-14	9	2	12	-16	-50	120
M_{xDL}	(k-ft)	-145	0	0	97	73	74	16	-125
M_{xLL}	(k-ft)	355	412	414	298	412	412	443	-16
$M_{xImpact}$	(k-ft)	60	70	70	51	70	70	75	-3
M_{xTotal}	(k-ft)	271	482	485	446	556	557	534	-144
f_a	(ksi)	6.71	6.79	6.49	6.84	6.98	7.41	7.84	7.39
f_{by}	(ksi)	-5.46	-1.58	1.01	0.25	1.44	-1.87	-5.84	13.90
f_{bx}	(ksi)	4.96	8.83	8.88	8.17	10.18	10.20	9.79	-2.63
$f_a+f_{by}+f_{bx}$	(ksi)	17.12	17.21	16.38	15.26	18.60	19.49	23.47	23.92

Stress Table Legend:

Force sign convention is as follows:

Axial Force, P
Positive (+) indicates tension

Out of Plane Moment, My
Positive (+) indicates compression on exterior fiber of member

In-Plane Moment, Mx
Positive (+) indicates compression on top fiber of member

P_{DL} and M_{DL} are the axial forces and moments due to permanent loads including the self-weight of the structure, parapets, and future wearing surface.

P_{LL} and M_{LL} are the axial forces and moments due to AASHTO HS20-44 truck or lane loading.

P_{Impact} and M_{Impact} are the axial forces and moments due to impact.

f_a is the applied axial stress.

f_{bx} is the applied In-Plane bending stress.

f_{by} is the applied Out of Plane bending stress.

Notes:

1. The arch rib shall be fabricated such that the rib axis describes the parabolic curve shown in the ARCH GEOMETRY elevation under dead load of steel and deck slab.

SHT. S-18 OF 40

REVISIONS	
NAME	DATE

CITY OF DANVILLE, ILLINOIS
HUNGRY HOLLOW ROAD BRIDGE

ARCH RIB ELEVATION & GEOMETRY II

SCALE: DRAWN BY
DATE 12/06/05 CHECKED BY

TENG
TENG & ASSOCIATES, INC.
ENGINEERS/ARCHITECTS/PLANNERS
203 N. MICHIGAN AVE. CHICAGO, IL 60601
TELEPHONE: 312/616 0000

..\TS1.000TC.DGN,..\SBL00P70.DGN,..\FRP00PSY.DGN,..\ALT00P83.DGN,..\TTB00029.DGN
12-07-2005,13:52:47
S:\DOCUMENT\02136902\STRUCTURE\DGN\SUP00PLL.DGN

ROSSPF

FAU RTE	SECTION	COUNTY	TOTAL SHEETS	SHEET NO.
7000	02-00212-00-BR	VERMILION	59	34
FROM STA. 96+00.00		TO STA. 103+10.10		
FED. ROAD DIST. NO.	ILLINOIS	FED. AID PROJECT		

CONTRACT NO. 91285

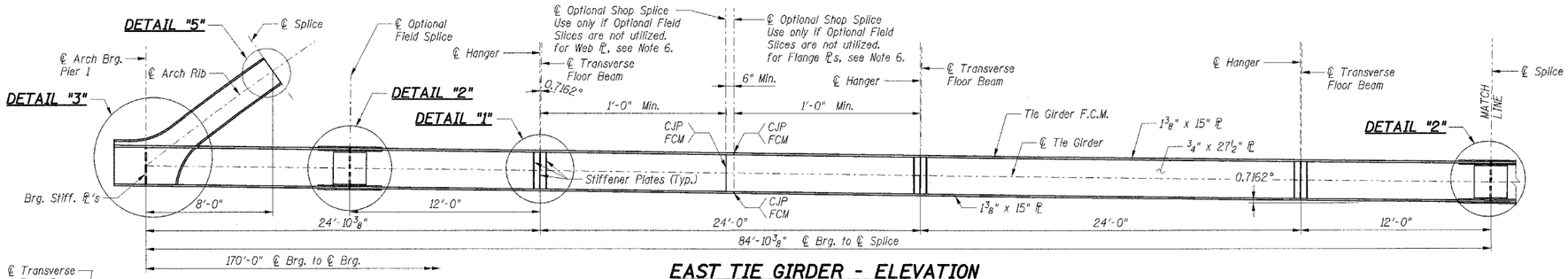

EAST TIE GIRDER - ELEVATION

(WEST TIE GIRDER - OPPOSITE HAND)

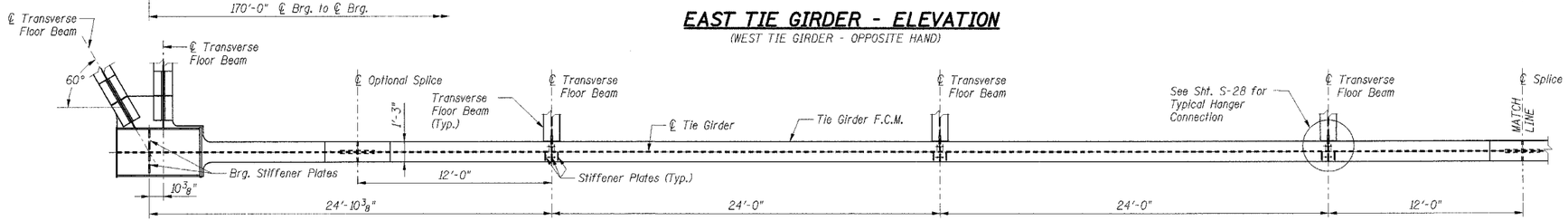

EAST TIE GIRDER - PLAN

(WEST TIE GIRDER - OPPOSITE HAND)

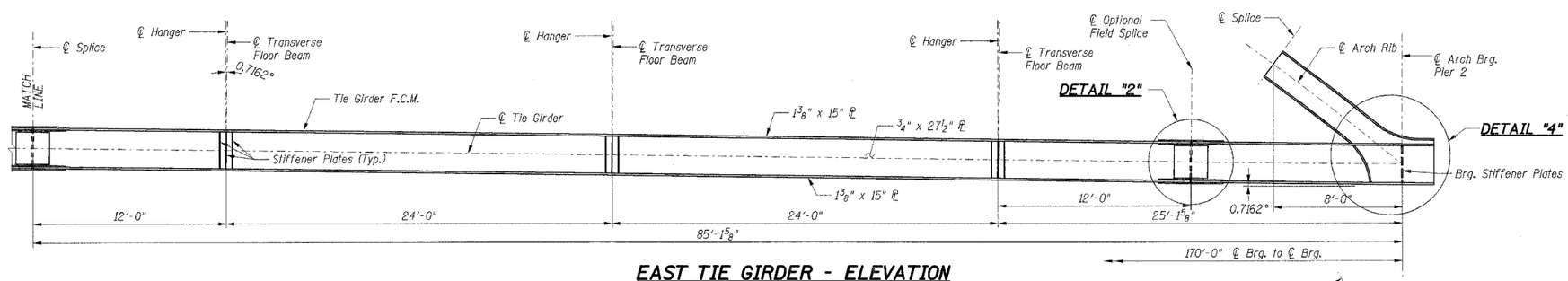

EAST TIE GIRDER - ELEVATION

(WEST TIE GIRDER - OPPOSITE HAND)

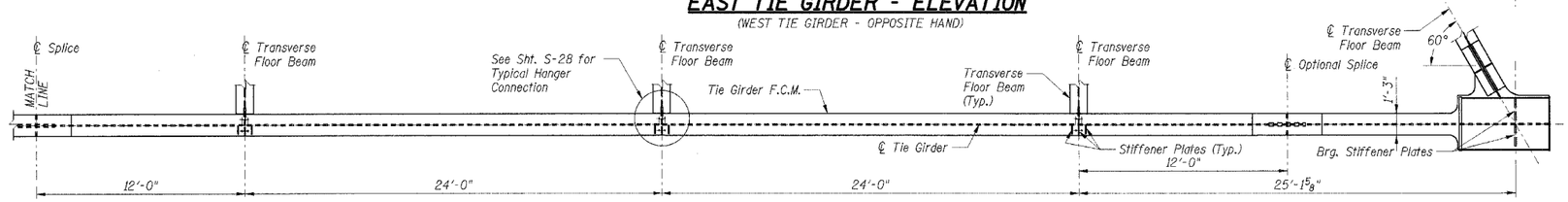

EAST TIE GIRDER - PLAN

(WEST TIE GIRDER - OPPOSITE HAND)

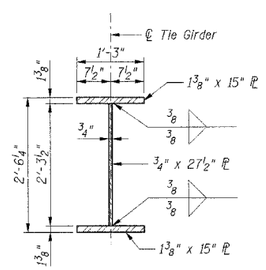

TYPICAL SECTION THRU TIE GIRDER

Notes:

1. For Details "1" & "2", see Sht. S-20.
2. For Detail "3", see Sht. S-21.
3. For Detail "4", see Sht. S-22.
4. For Detail "5", see Sht. S-27.
5. Members and Member Components designated F.C.M. shall be subject to The Provisions for Fracture Critical Members.
6. Locations of optional flange and web shop splices shall be subject to the approval of The Engineer. For optional shop splice requirements refer to Standard Specification for Steel Structures, Section 505.04.

SHT. S-19 OF 40

REVISIONS	
NAME	DATE

CITY OF DANVILLE, ILLINOIS
HUNGRY HOLLOW ROAD BRIDGE

TIE GIRDER ELEVATION

SCALE:
DATE 12/06/05
DRAWN BY LAR
CHECKED BY JRH

TENG

TENG & ASSOCIATES, INC.
ENGINEERS/ARCHITECTS/PLANNERS
205 W. MICHIGAN AVE. CHICAGO, IL 60601
TELEPHONE 312/616-3600

ROSSPF
..\TTB0002X.DGN,..\BMEO0PR.DGN,..\GFE00P7X.DGN,..\BMEO0PR.DGN,..\SUD00P93.DGN,..\PROOFRA.DGN
12-07-2005, 15:42:46
S:\DOCUMENT\023569\2\STRUCT\DGN\BMEO0PR.DGN

FAU RTE	SECTION	COUNTY	TOTAL SHEETS	SHEET NO.
7000	02-00212-00-BR	VERMILION	59	35
FROM STA. 96+00.00		TO STA. 103+10.10		
FED. ROAD DIST. NO.	ILLINOIS	FED. AID PROJECT		

CONTRACT NO. 91285

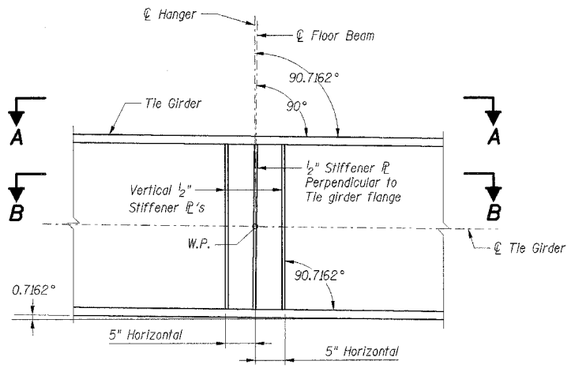

DETAIL "1" - TYP. TRANS. FLOOR BEAM CONNECTION

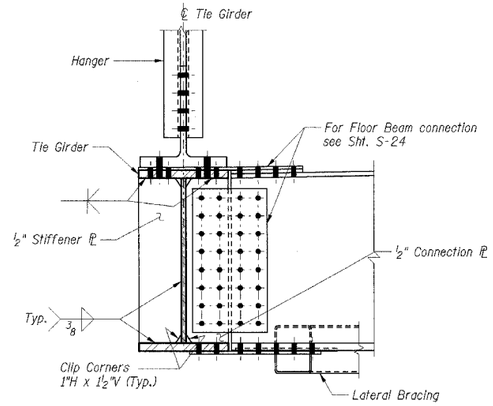

SECTION C-C

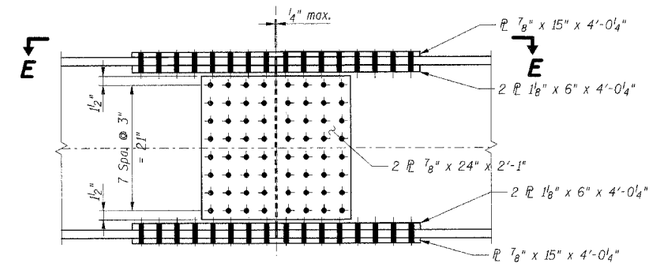

DETAIL "2" - TIE GIRDER SPLICE

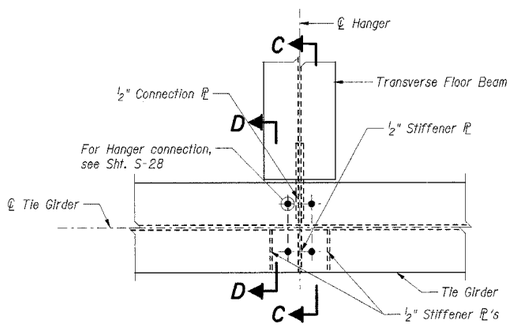

SECTION A-A

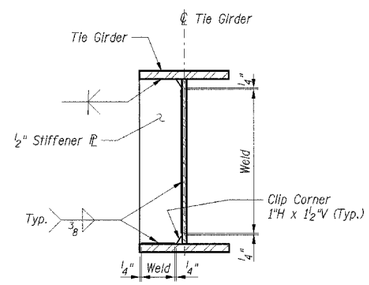

SECTION D-D

Typical for Vertical Stiffener Plates

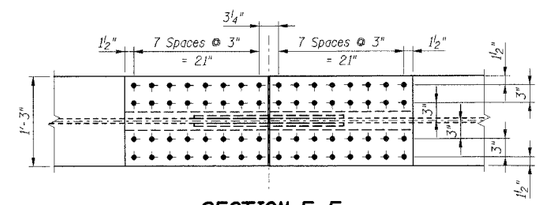

SECTION E-E

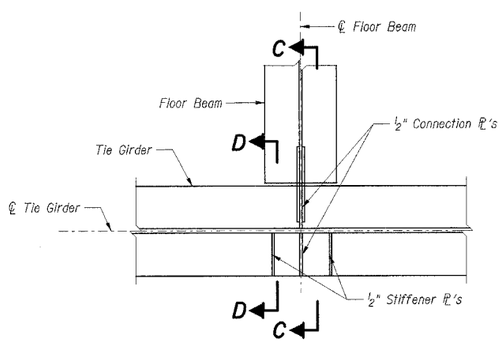

SECTION B-B

Notes:

1. Work this Sheet with Sht. S-19.
2. Members and Member Components designated F.C.M. shall be subject to The Provisions for Fracture Critical Members.
3. All welds to the Girder shall be considered Fracture Critical.

SHT. S-20 OF 40

REVISIONS	
NAME	DATE

CITY OF DANVILLE, ILLINOIS
HUNGRY HOLLOW ROAD BRIDGE

TIE GIRDER SPLICE DETAILS

SCALE:
DATE 12/06/05

DRAWN BY LAR
CHECKED BY JRH

TENG

TENG & ASSOCIATES, INC.
ENGINEERS/ARCHITECTS/PLANNERS
205 N. MICHIGAN AVE. CHICAGO, IL 60601
TELEPHONE 312/616-0030

..\TTB00079.DGN,..\BMEOOP8L.DGN,..\BMEOOP8LB.DGN,..\BMD00P8P.DGN
12-07-2005,13:29:45 S:\DOCUMENT\02336902\STRUCT\DGN\BD00P8K.DGN

ROSPF

FAU RTE	SECTION	COUNTY	TOTAL SHEETS	SHEET NO.
7000	02-00212-00-BR	VERMILION	59	36
FROM STA. 96+00.00		TO STA. 103+10.10		
FED. ROAD DIST. NO.	ILLINOIS	FED. AID PROJECT		

CONTRACT NO. 91285

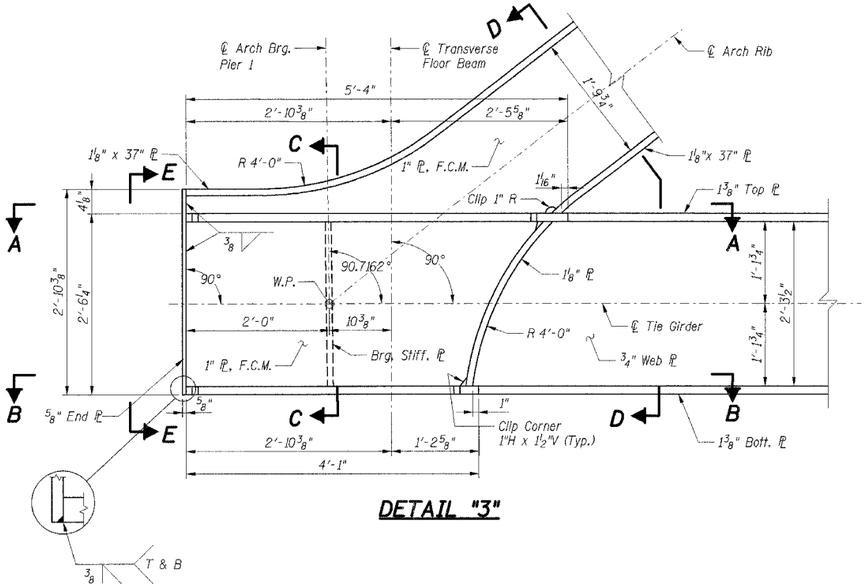

DETAIL "3"

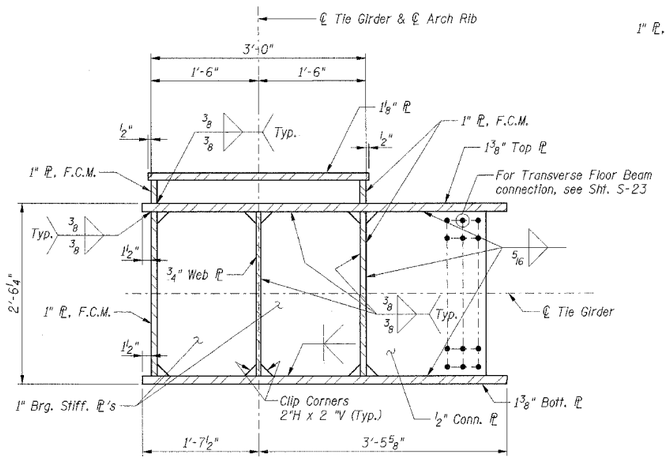

SECTION C-C

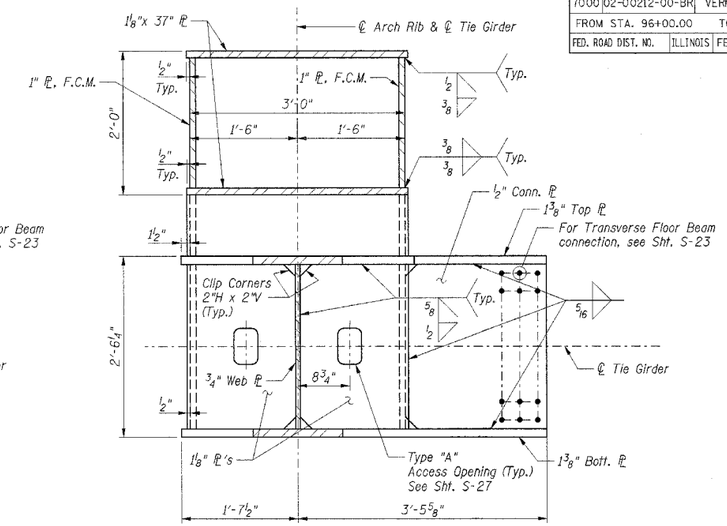

SECTION D-D

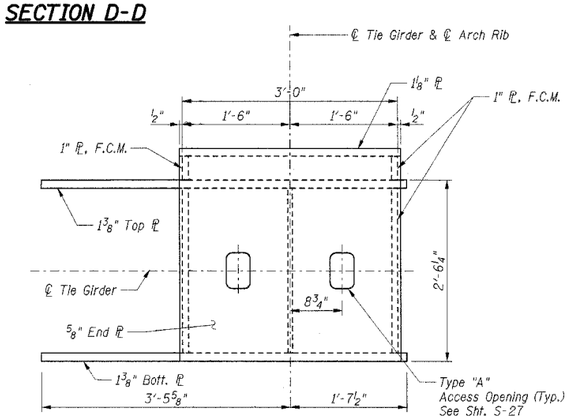

SECTION E-E

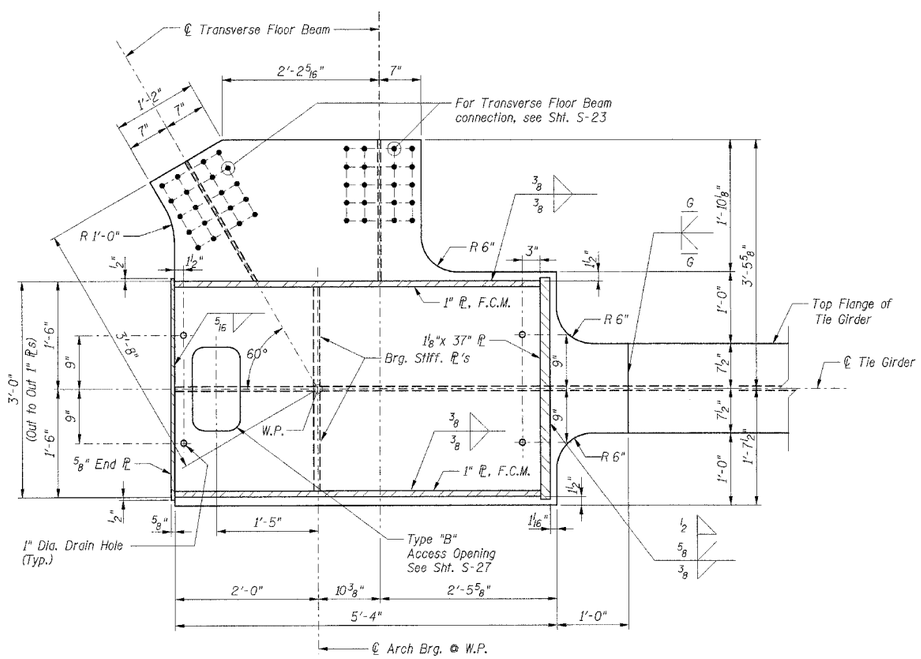

SECTION A-A

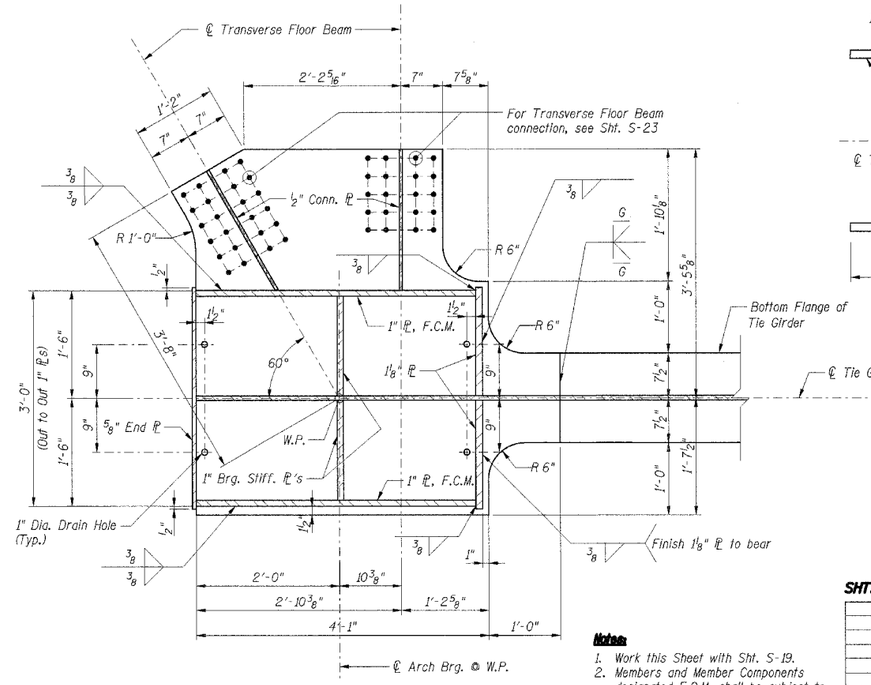

SECTION B-B

Notes:

1. Work this Sheet with Sht. S-19.
2. Members and Member Components designated F.C.M. shall be subject to The Provisions for Fracture Critical Members.
3. All welds to the Girder shall be considered Fracture Critical.

SHT. S-21 OF 40

REVISIONS	
NAME	DATE

CITY OF DANVILLE, ILLINOIS
HUNGRY HOLLOW ROAD BRIDGE

TIE GIRDER DETAILS - I

SCALE: DRAWN BY LAR/HBJ
DATE 12/06/05 CHECKED BY JRH

TENG

TENG & ASSOCIATES, INC.
ENGINEERS ARCHITECTS PLANNERS
205 N. MICHIGAN AVE. CHICAGO, IL 60601
TELEPHONE: 312-616-1500

..\TIEGDOQ73.DGN,..\FRFOOP5Y.DGN,..\GFEOOP7X.DGN,..\BMEOOP8L.DGN,..\BR60OP8U.DGN,..\GDOOP8K.DGN,..\SLDOOP8G.DGN
12-07-2005,13:24:44 S:\DOCUMENT\02356902\STRUCTURE\SLDOOPV3.DGN
RGSSPF

FAU RTE	SECTION	COUNTY	TOTAL SHEETS	SHEET NO.
7000	02-00212-00-BR	VERMILION	59	37
FROM STA. 96+00.00		TO STA. 103+10.10		
FED. ROAD DIST. NO.	ILLINOIS	FED. AID PROJECT		

CONTRACT NO. 91285

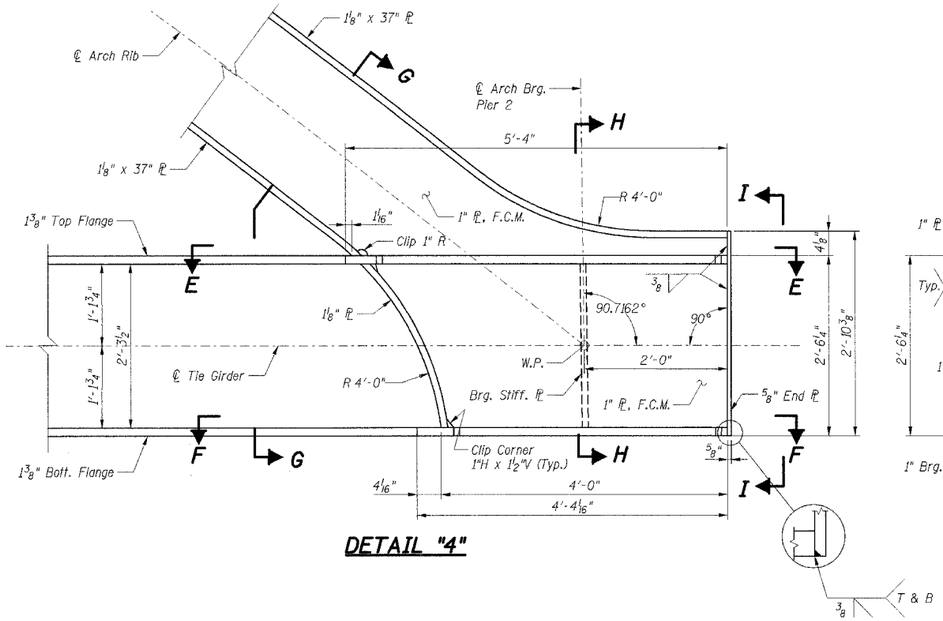

DETAIL "4"

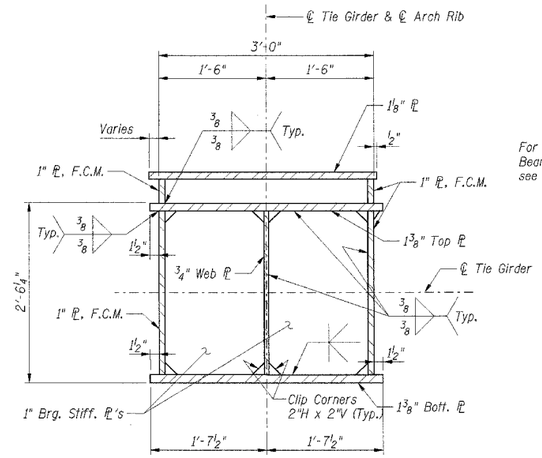

SECTION H-H

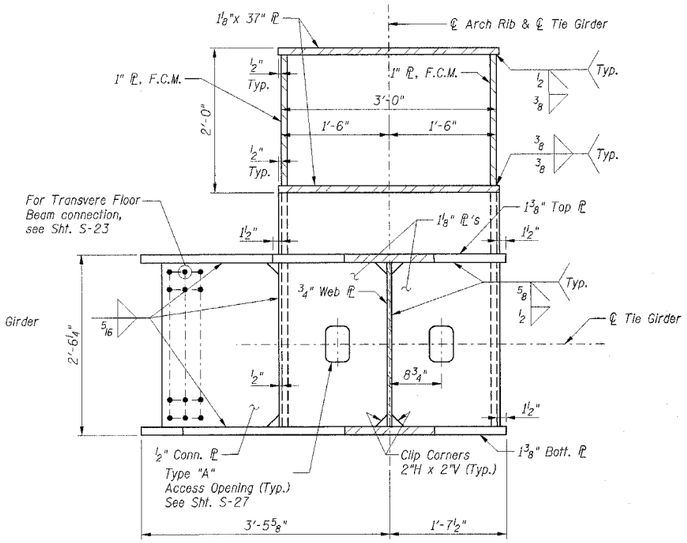

SECTION G-G

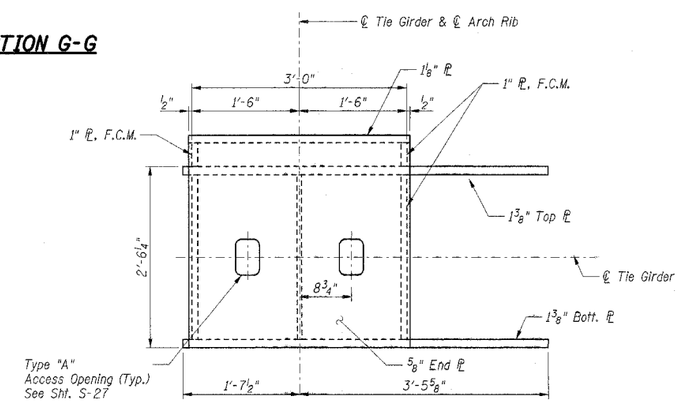

SECTION I-I

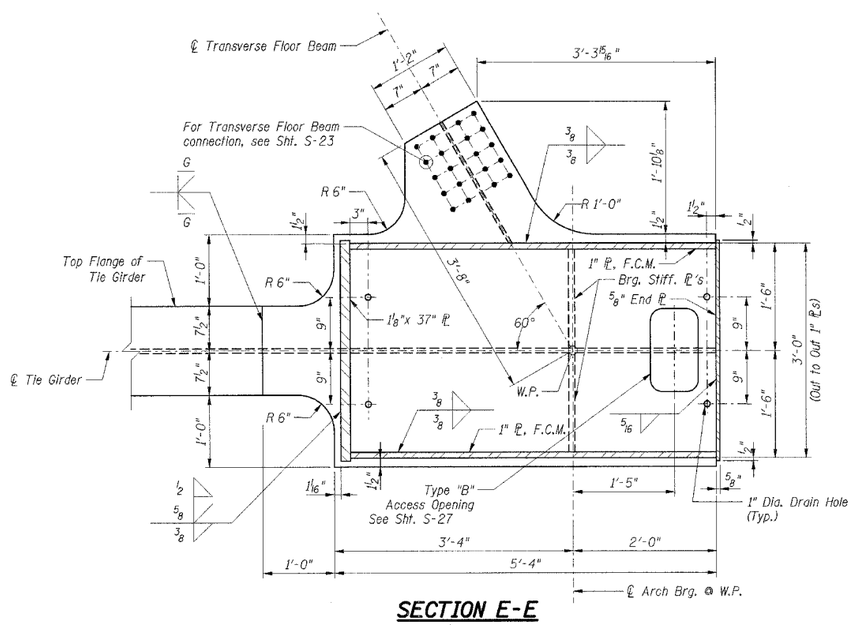

SECTION E-E

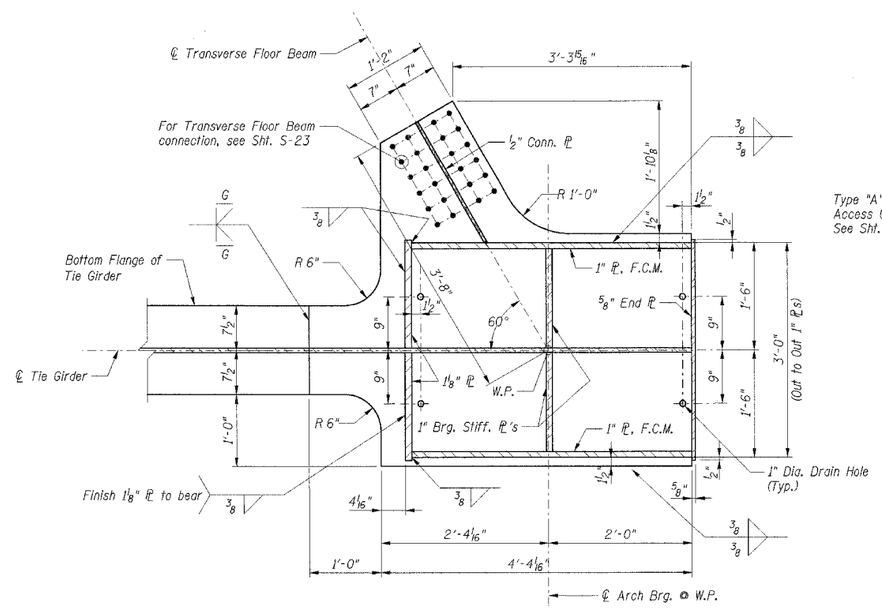

SECTION F-F

Notes:

1. Work this Sheet with Sht. S-19.
2. Members and Member Components designated F.C.M. shall be subject to The Provisions for Fracture Critical Members.
3. All welds to the Girder shall be considered Fracture Critical.

SHT. S-22 OF 40

REVISIONS	
NAME	DATE

CITY OF DANVILLE, ILLINOIS
HUNGRY HOLLOW ROAD BRIDGE

TIE GIRDER DETAILS - II

SCALE:
DATE 12/06/05
DRAWN BY LAR/HBJ
CHECKED BY JRH

TENG

TENG & ASSOCIATES, INC.
ENGINEERS/ARCHITECTS/PLANNERS
303 N. MICHIGAN AVE. CHICAGO, IL 60601
TELEPHONE 312/616-0500

..\TP00023.DGN,..\FRP00P5V.DGN,..\SUD00PV3.DGN
12-07-2005, 3:32:43
S:\DOCUMENT\02336902\STRUCT\DGN\SUD00P#Z.DGN
ROSSPF

FAU RTE	SECTION	COUNTY	TOTAL SHEETS	SHEET NO.
7000	02-00212-00-BR	VERMILION	59	38
FROM STA. 96+00.00		TO STA. 103+10.10		
FED. ROAD DIST. NO.	ILLINOIS	FED. AID PROJECT		

CONTRACT NO. 91285

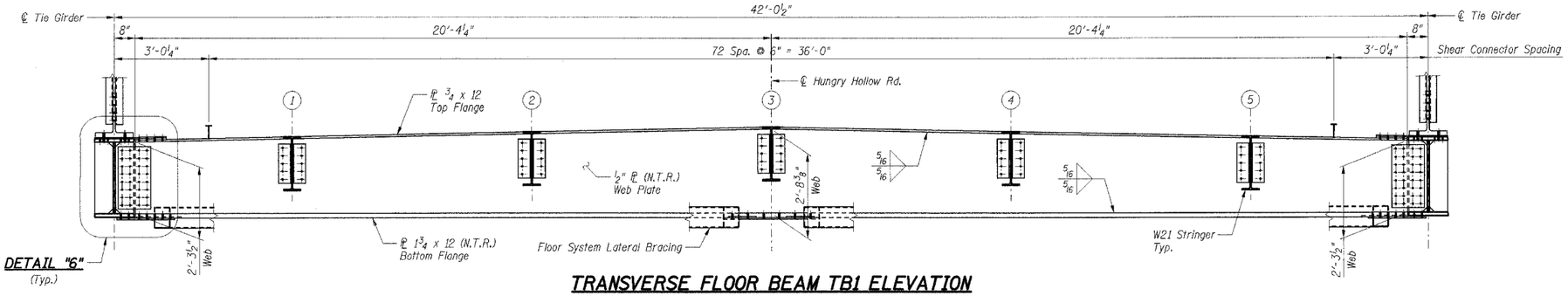

TRANSVERSE FLOOR BEAM TB1 ELEVATION

(5 Required)

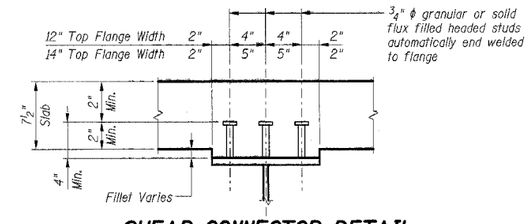

SHEAR CONNECTOR DETAIL

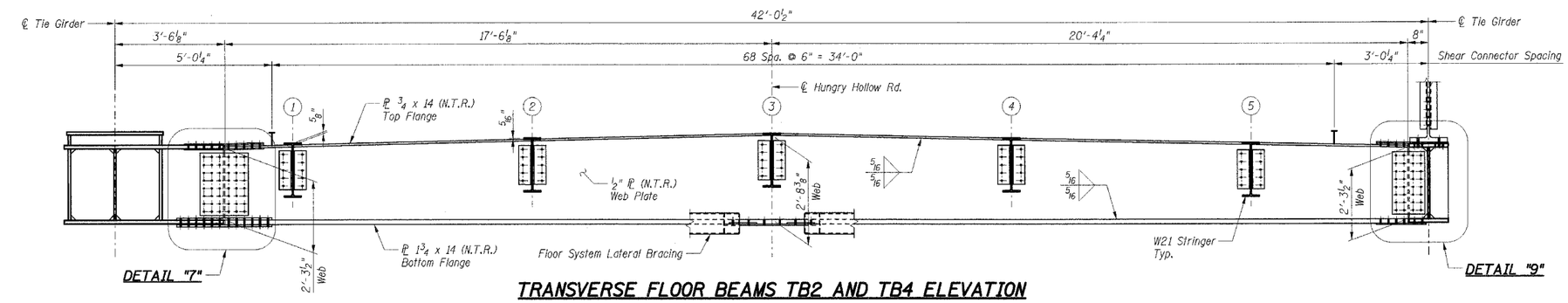

TRANSVERSE FLOOR BEAMS TB2 AND TB4 ELEVATION

(TB2 shown, TB4 similar)

Notes:

1. All structural steel shall be AASHTO M 270 Grade 50W.
2. N.T.R. denotes steel that shall conform to the Supplemental Requirements for Notch Toughness (Zone 2).
3. For Details "6", "7", and "9" see Sheet S-24.
4. For Floor System Lateral Bracing Details see Sheet S-26.

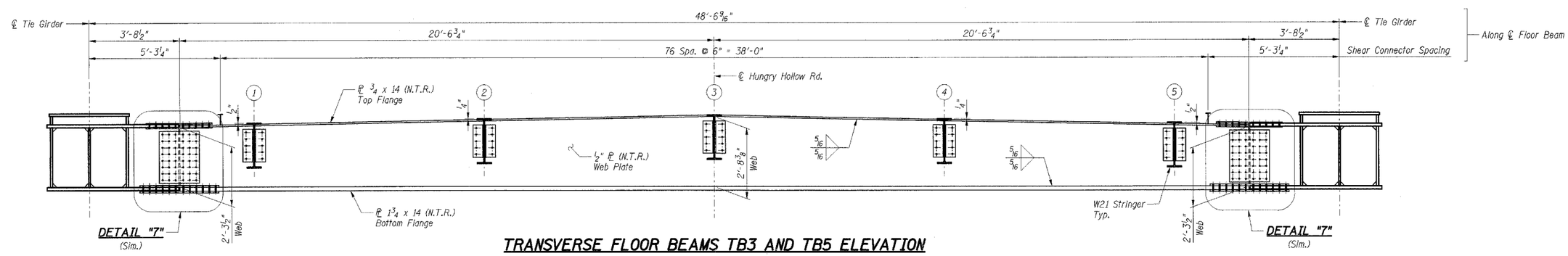

TRANSVERSE FLOOR BEAMS TB3 AND TB5 ELEVATION

(TB3 shown, TB5 similar)

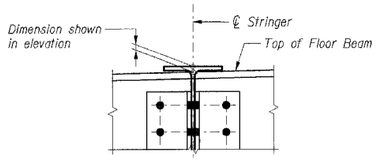

STRINGER OFFSET DETAIL

BILL OF MATERIAL

Item	Unit	Total
Stud Shear Connectors	Each	1971

SHT. S-23 OF 40

REVISIONS	
NAME	DATE

CITY OF DANVILLE, ILLINOIS
HUNGRY HOLLOW ROAD BRIDGE

TRANSVERSE FLOOR BEAM ELEVATIONS

SCALE:
DATE 12/06/05
DRAWN BY CCE
CHECKED BY JRH

TENG

TENG & ASSOCIATES, INC.
ENGINEERS • ARCHITECTS • PLANNERS
205 N. MICHIGAN AVE. CHICAGO, IL 60601
TELEPHONE 312-616-0040

..\FRP00P5V.DGN, ..\TTB00078.DGN, ..\BME00P8L.DGN, ..\SU00P8L.DGN, ..\FRP00P5E.DGN, ..\BME00P8M.DGN, ..\SU00P43.DGN, ..\BME00P8L.DGN
12-07-2005, 15:22:41
S:\DOCUMENT\02336902\STRUCTURE\BME00P8L.DGN

FAU RTE	SECTION	COUNTY	TOTAL SHEETS	SHEET NO.
7000	02-00212-00-BR	VERMILION	59	39
FROM STA. 96+00.00		TO STA. 103+10.10		
FED. ROAD DIST. NO.	ILLINOIS	FED. AID PROJECT		

CONTRACT NO. 91285

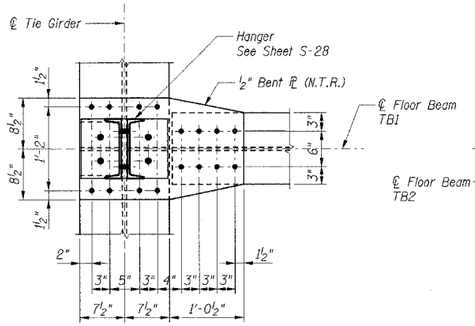

SECTION A-A

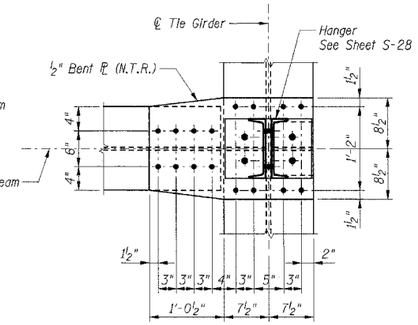

SECTION F-F

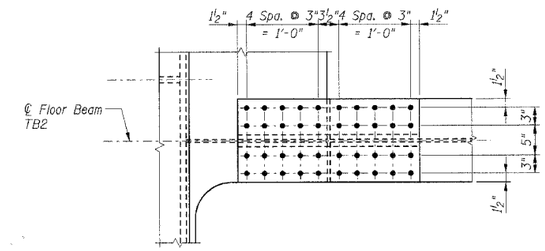

SECTION D-D

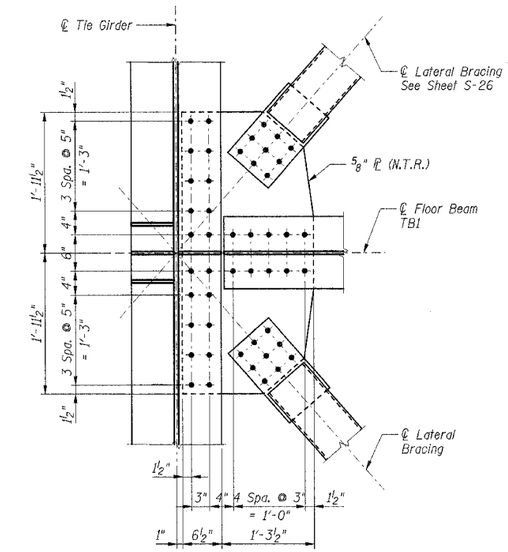

SECTION C-C

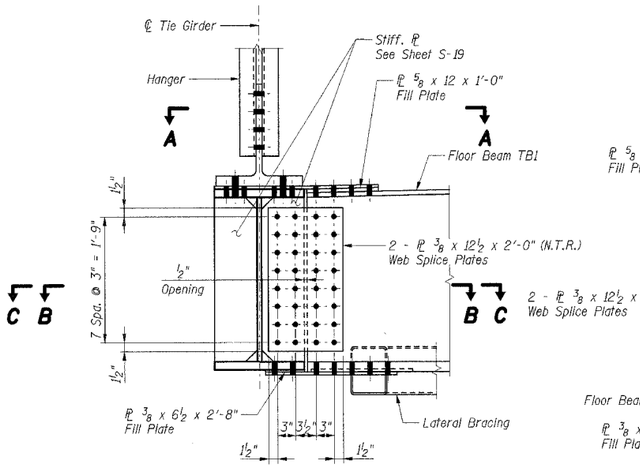

DETAIL "6"

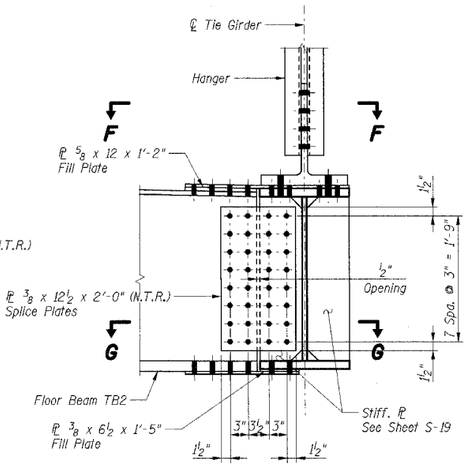

DETAIL "9"

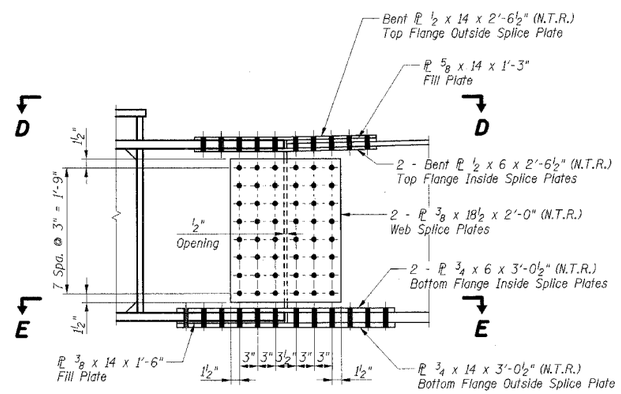

DETAIL "7"

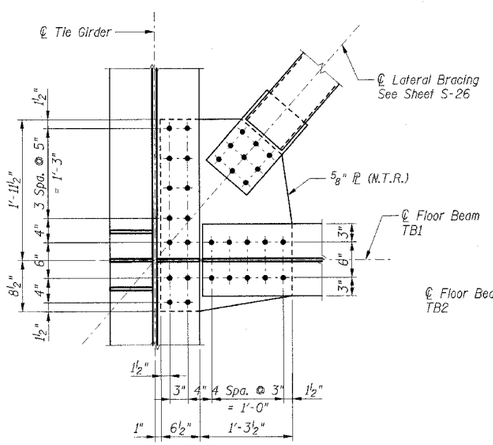

SECTION B-B

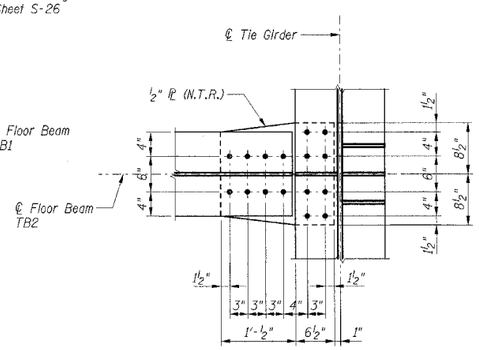

SECTION G-G

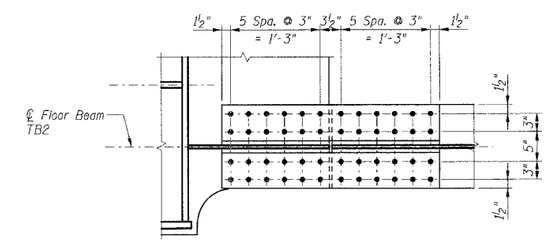

SECTION E-E

Notes:

1. All structural steel shall be AASHTO M 270 Grade 50W.
2. N.T.R. denotes steel that shall conform to the Supplemental Requirements for Notch Toughness (Zone 2).
3. Fasteners for floor beam connections shall be ⅞" ϕ AASHTO M 164, Type 3 high-strength bolts in 15/16" ϕ holes.

SHT. S-24 OF 40

REVISIONS	
NAME	DATE

CITY OF DANVILLE, ILLINOIS
HUNGRY HOLLOW ROAD BRIDGE

TRANSVERSE FLOOR BEAM CONNECTION DETAILS

SCALE: DRAWN BY CCE
DATE 12/06/05 CHECKED BY JRH

TENG

TENG & ASSOCIATES, INC.
ENGINEERS/ARCHITECTS/PLANNERS
205 N. MICHIGAN AVE. CHICAGO, IL 60601
TELEPHONE 312/616-0300

ROSSFF

..\TT8000Z9.DGN, ..\BME00P8L.DGN
12-07-2005, 13:24:40
S:\DOCUMENT\02336902\STRUCTURAL\BM00P8P.DGN

FAU RTE	SECTION	COUNTY	TOTAL SHEETS	SHEET NO.
7000	02-00212-00-BR	VERMILION	59	40
FROM STA. 96+00.00		TO STA. 103+10.10		
FED. ROAD DIST. NO.	ILLINOIS	FED. AID PROJECT		

CONTRACT NO. 91285

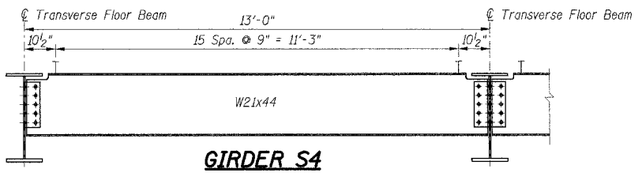

GIRDER S4

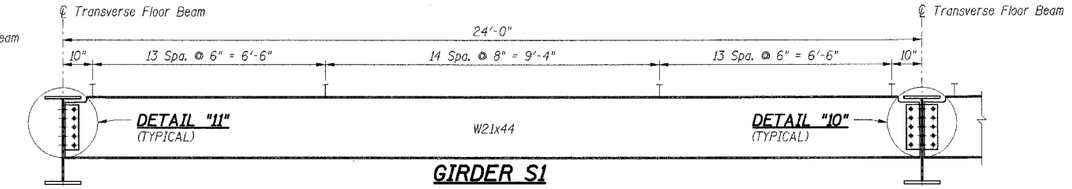

GIRDER S1

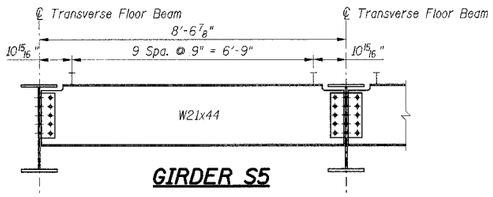

GIRDER S5

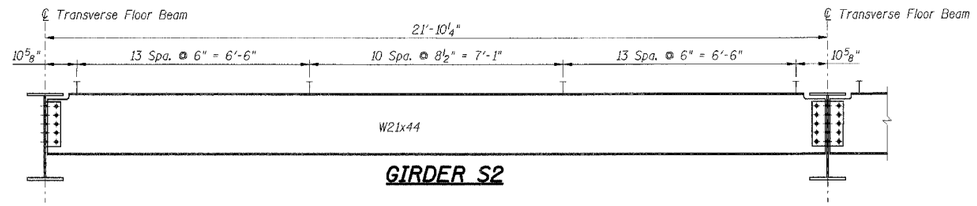

GIRDER S2

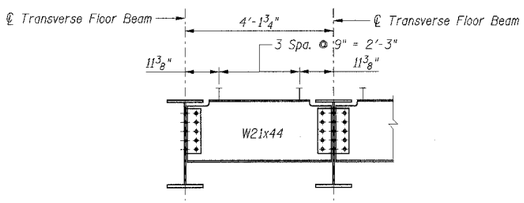

GIRDER S6

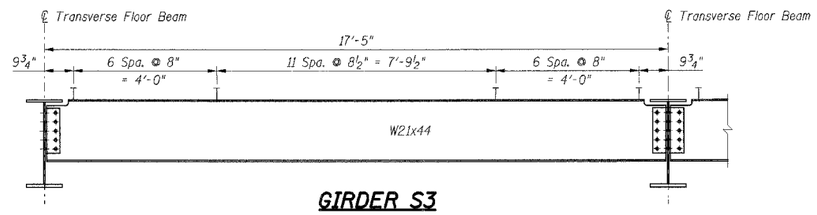

GIRDER S3

TYPICAL INTERIOR STRINGER MOMENT TABLE		
		Midspan
Is	(in4)	843
Ic(n)	(in4)	3237
Ic(3n)	(in4)	2495
Ss	(in3)	82
Sc(n)	(in3)	148
Sc(3n)	(in3)	132
Z	(in3)	95.4
MD	(k-ft)	0.763
MD	(k-ft)	55
sD	(k-ft)	0.520
MsD	(k-ft)	37
MsL	(k-ft)	169
M (Imp)	(k-ft)	51
⅔(ML + I)	(k-ft)	365
Ma	(k-ft)	595
Mu	(k-ft)	794
fsD non-comp	(k.s.i.)	8.1
fsD comp	(k.s.i.)	3.4
fs⅔(L+I)	(k.s.i.)	29.6
fs (Overload)	(k.s.i.)	41.1
fs (Total)	(k.s.i.)	
VR	(k)	50.5

TYPICAL INTERIOR STRINGER REACTION TABLE		
		W. Abut.
RD	(k)	15.4
RL	(k)	38.8
Imp.	(k)	11.6
R (Total)	(k)	65.8

Is and Ss are the moment of inertia and section modulus of the steel section used in computing fs (Total & Overload).

Ic and Sc are the moment of inertia and section modulus of the composite section used in computing fs (Total & Overload).

VR is the maximum Live Load + Impact shear range in span.

Z is the plastic section modulus used to determine the fully plastic moments in the non-composite areas.

Ma (Applied Moment)=1.3[MD + MsD + ⅔(ML + I)].

Mu is the Full Plastic Moment Capacity for Compact, Braced section.

fs (Overload) is the sum of the stresses due to MD + MsD + ⅔(ML + I).

fs (Total) (Non-compact section) is the sum of the stresses due to 1.3[MD + MsD + ⅔(ML + I)].

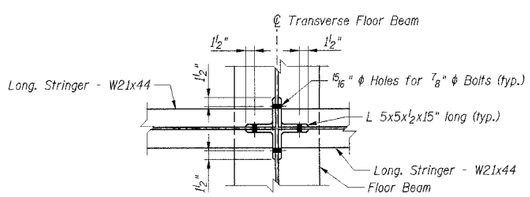

SECTION B-B

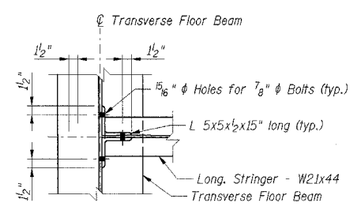

SECTION D-D

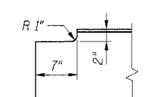

COPING DETAIL (TYP.)

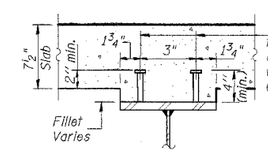

¾"ϕ Granular or solid flux filled headed studs automatically end welded to flange. (No. Req'd.=2824)

STUD DETAIL

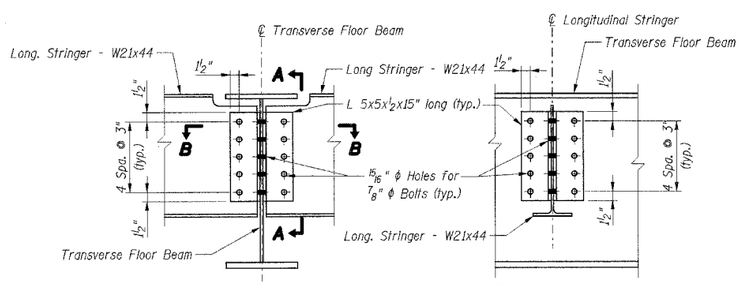

DETAIL "10" SECTION A-A

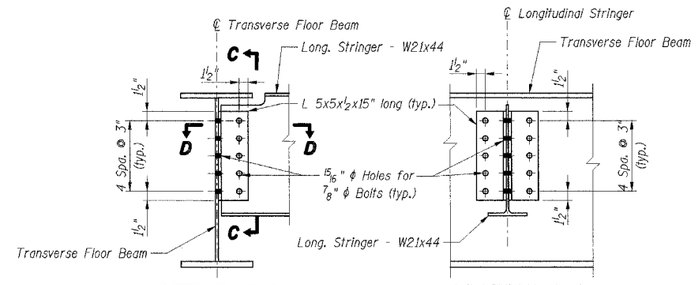

DETAIL "11" SECTION C-C

BILL OF MATERIAL

Item	Unit	Total
Stud Shear Connectors	Each	2824

SHT. S-25 OF 40

REVISIONS	
NAME	DATE

CITY OF DANVILLE, ILLINOIS
HUNGRY HOLLOW ROAD BRIDGE

LONGITUDINAL STRINGER ELEVATIONS

SCALE:
DATE 12/06/05
DRAWN BY LAR
CHECKED BY JRH

TENG

TENG & ASSOCIATES, INC.
ENGINEERS AND ARCHITECTS PLANNERS
205 N. MICHIGAN AVE. CHICAGO, IL 60601
TELEPHONE 312-616-2000

ROSSPE

..\TTB0023.DGN,..\BMEXDPRM.DGN
S:\DOCUMENT\02336902\STRUCT\DGN\BMEXDPRM.DGN
12-07-2005,13:12:40

FAU RTE	SECTION	COUNTY	TOTAL SHEETS	SHEET NO.
7000	02-00212-00-BR	VERMILION	59	41
FROM STA. 96+00.00		TO STA. 103+10.10		
FED. ROAD DIST. NO.	ILLINOIS	FED. AID PROJECT		

CONTRACT NO. 91285

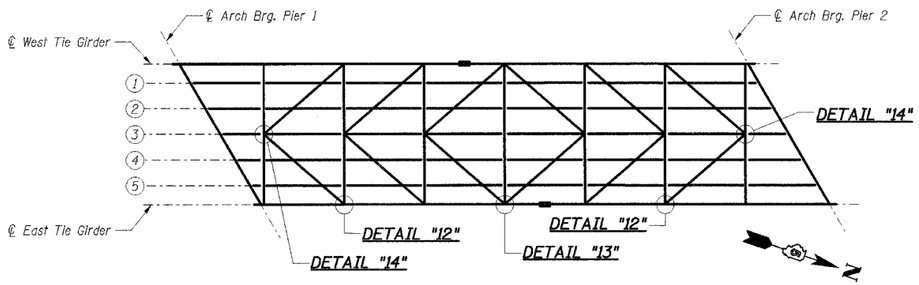

LOWER LATERAL KEY PLAN

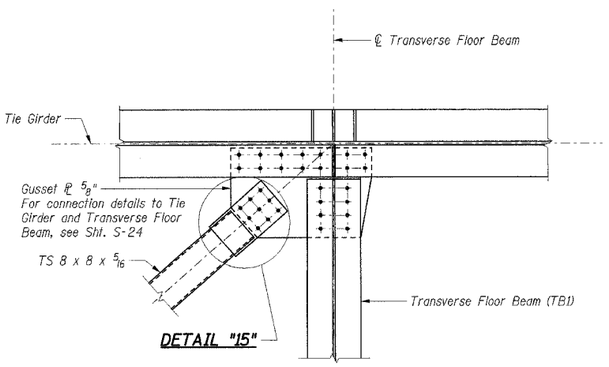

DETAIL "12"

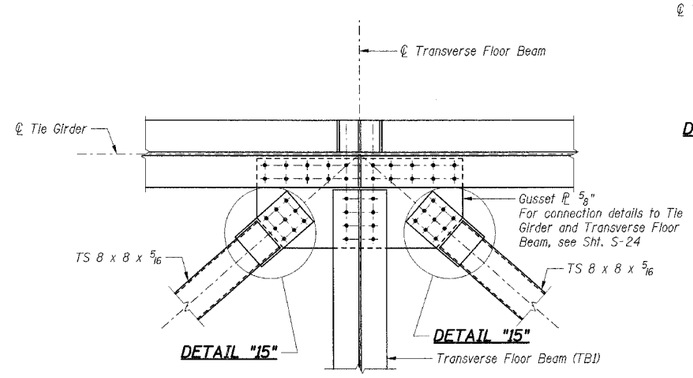

DETAIL "13"

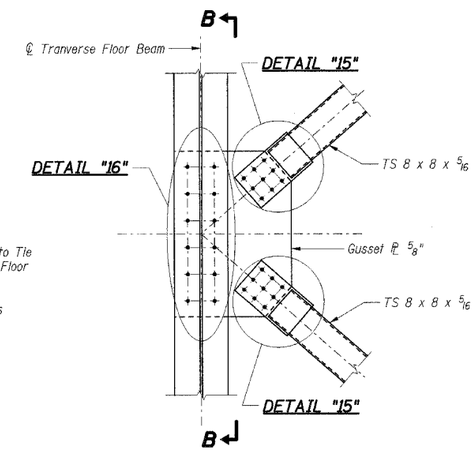

DETAIL "14"

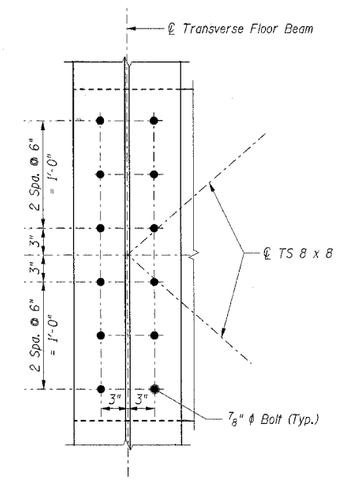

DETAIL "16"

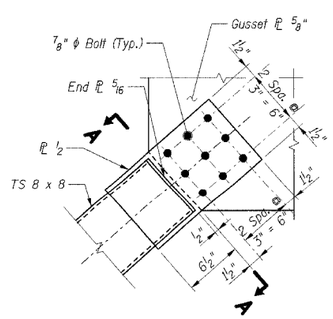

DETAIL "15"

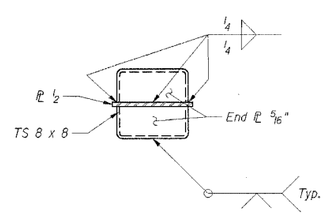

SECTION A-A

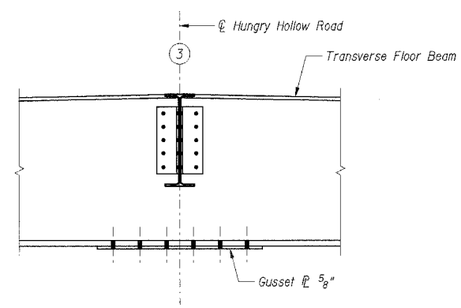

SECTION B-B

SHT. S-26 OF 40

REVISIONS	
NAME	DATE

CITY OF DANVILLE, ILLINOIS
HUNGRY HOLLOW ROAD BRIDGE

FLOOR SYSTEM LATERAL BRACING DETAILS

SCALE:
DATE 12/06/05
DRAWN BY RAM
CHECKED BY JRH

TENG

TENG & ASSOCIATES, INC.
ENGINEERS&ARCHITECTS&PLANNERS
205 N. MICHIGAN AVE. CHICAGO, IL 60601
TELEPHONE: 312/616-1000

R05SPF
...\FRPROPSYS.DGN, ...\TTB0100G2.DGN, ...\DETOOPRN.DGN, ...\BMEOOPRL.DGN, ...\BMEOOPRL.DGN
12-07-2005, 12:24:33 SS-DOCUMENT\02233692\STRUCTVGN\DETOOPRN.DGN

FAU RTE	SECTION	COUNTY	TOTAL SHEETS	SHEET NO.
7000	02-00212-00-BR	VERMILION	59	42
FROM STA. 96+00.00		TO STA. 103+10.10		
FED. ROAD DIST. NO.	ILLINOIS	FED. AID PROJECT		

CONTRACT NO. 91285

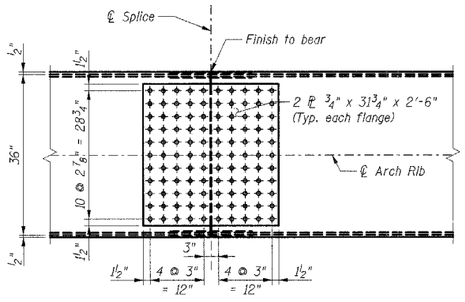

SECTION C-C

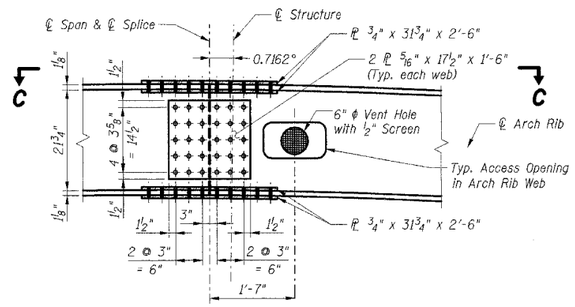

SPLICE AT ℄ SPAN

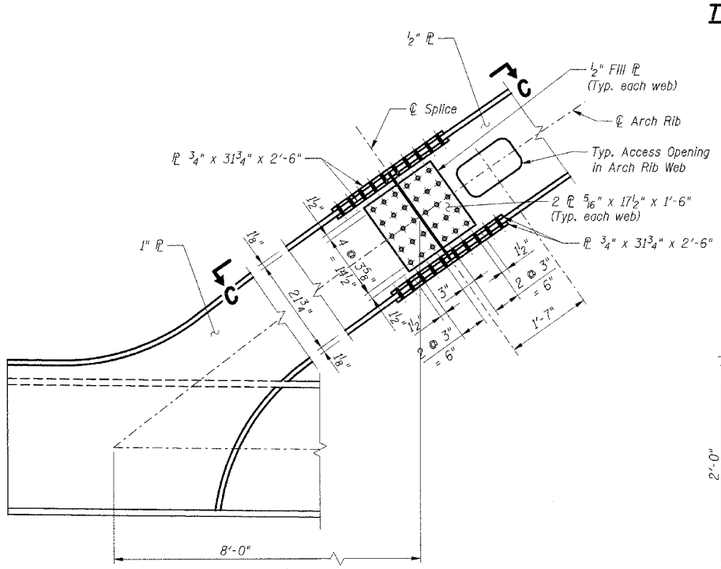

SPLICE NEAR END OF ARCH RIB

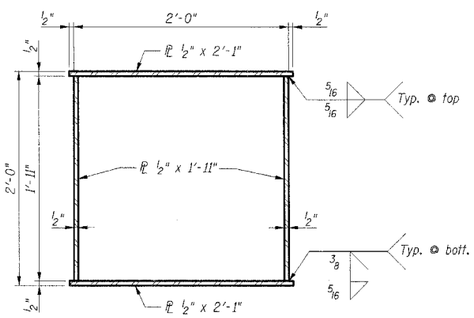

TYPICAL BRACE CROSS SECTION

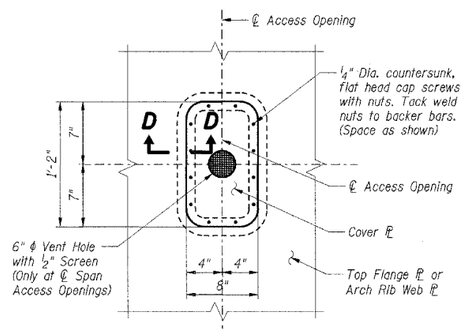

TYPE "B" ACCESS OPENING DETAIL

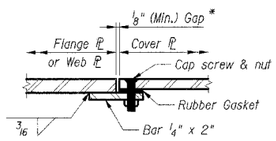

SECTION D-D

* Fill gap with silicone sealant. Cost of silicone sealant and rubber gasket not to be paid for separately but to be included in the cost of other items.

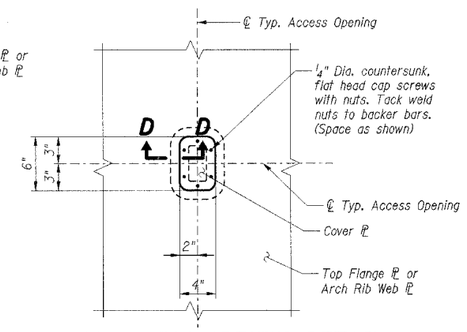

TYPE "A" ACCESS OPENING DETAIL

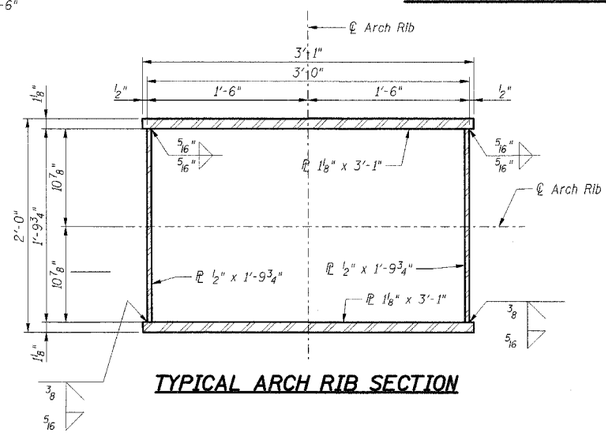

TYPICAL ARCH RIB SECTION

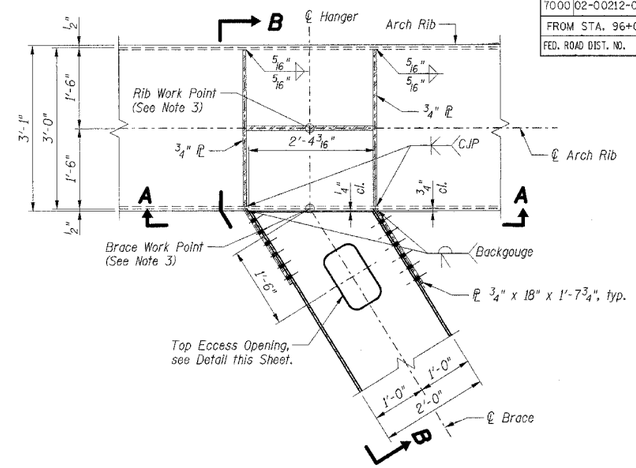

BRACE TO ARCH RIB CONNECTION

Hanger not shown for clarity

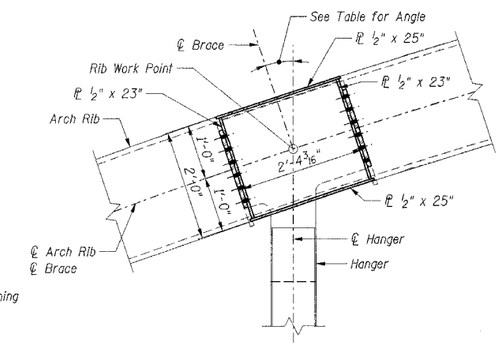

Work Point	Angle East Arch Rib	Angle West Arch Rib
R-2	18.2632°	18.1322°
R-3	6.0356°	5.8678°
R-4	6.8715°	7.0674°
R-5	19.2086°	19.4205°

SECTION A-A

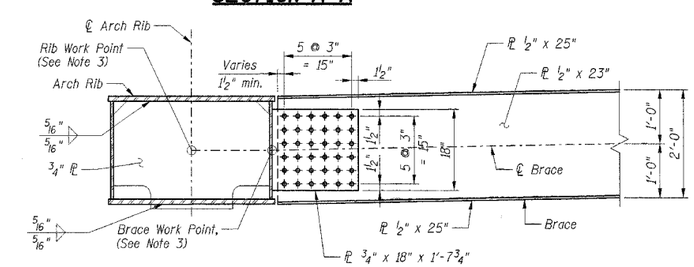

SECTION B-B

Notes:

1. Fasteners for Splices and Arch Rib to Brace connections shall be 7/8" ϕ AASHTO M 164 high-strength bolts in 15/16" ϕ holes.
2. All structural steel shall be AASHTO M 270 Grade 50W.
3. Brace Work Point Elevation corresponds to adjacent Rib Work Point at each location. For Rib Work Elevation see Sht. S-18.

SHT. S-27 OF 40

REVISIONS NAME	DATE

CITY OF DANVILLE, ILLINOIS
HUNGRY HOLLOW ROAD BRIDGE

ARCH RIB DETAILS

SCALE:
DATE 12/06/05
DRAWN BY LAR
CHECKED BY JRH

TENG

TENG & ASSOCIATES, INC.
ENGINEERS ARCHITECTS PLANNERS
205 N. MICHIGAN AVE. CHICAGO, IL 60601
TELEPHONE 312/616-1500

..\TB00079.DGN,..\SUD00P86.DGN,..\SUD00P86.DGN,..\SUD00P86.DGN
12-07-2005,13:26:38
S:\DOCUMENT\02336902\STRUCT\DGN\SUD00P86.DGN
ROSSPF

FAU RTE	SECTION	COUNTY	TOTAL SHEETS	SHEET NO.
7000	02-00212-00-BR	VERMILION	59	43
FROM STA. 96+00.00		TO STA. 103+10.10		
FED. ROAD DIST. NO.	ILLINOIS	FED. AID PROJECT		

CONTRACT NO. 91285

HANGER STRESS DATA

Hanger West	Hanger East	"P_{DL}" (kips)	"P_{FWS}" (kips)	"P_{LL}" (kips)	"P_{IMPACT}" (kips)	"P_{TOTAL}" (kips)
1	6	62	19	32	6	119
2	5	71	22	41	7	141
3	4	70	22	42	8	142
4	3	70	22	42	8	142
5	2	70	22	42	8	142
6	1	70	22	36	7	135

Legend:

1. P_{DL} is the axial force in the hanger due to permanent loads including steel self weight, deck and parapets.
2. P_{FWS} is the axial force in the hanger due to future wearing surface.
3. P_{LL} is the axial force in the Hanger due to AASHTO HS20-44 truck or lane loading.
4. P_{Impact} is the axial force in the hanger due to impact loading.

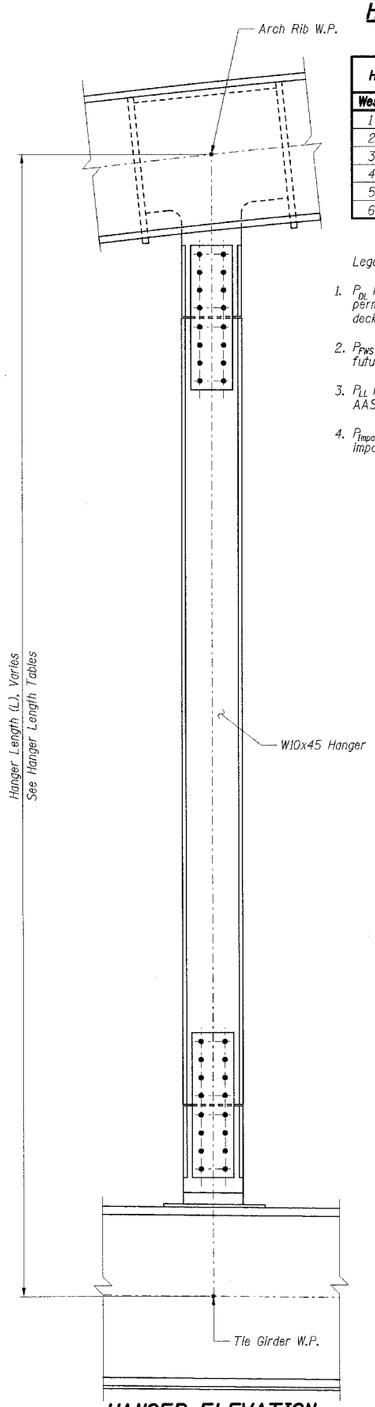

HANGER ELEVATION

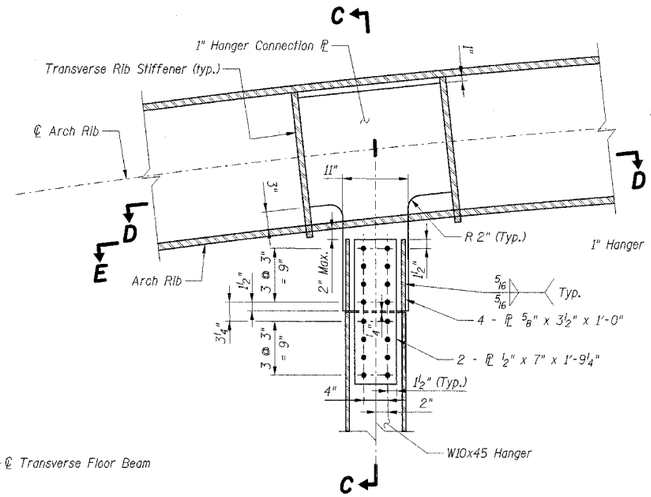

HANGER TO ARCH RIB CONNECTION

(Section thru Arch Rib)

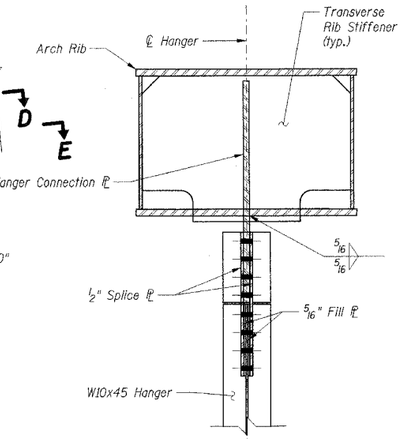

SECTION C-C

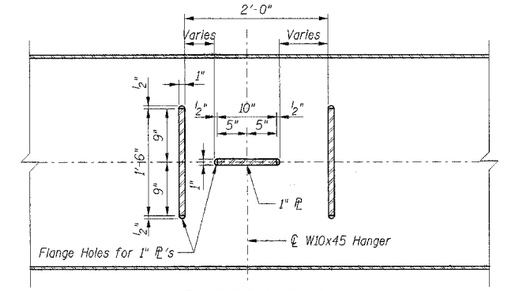

SECTION E-E

(Hanger not shown for clarity)

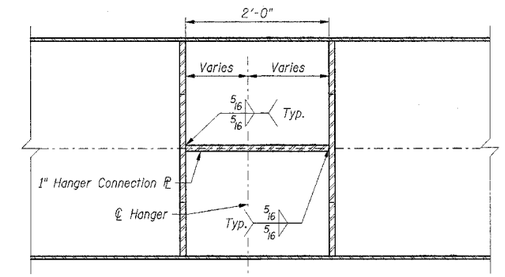

SECTION D-D

(Hanger not shown for clarity)

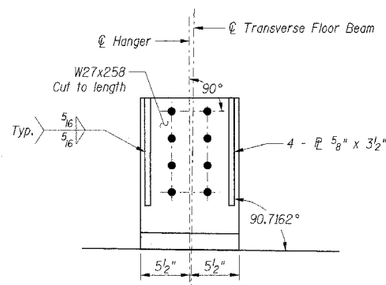

DETAIL "21"

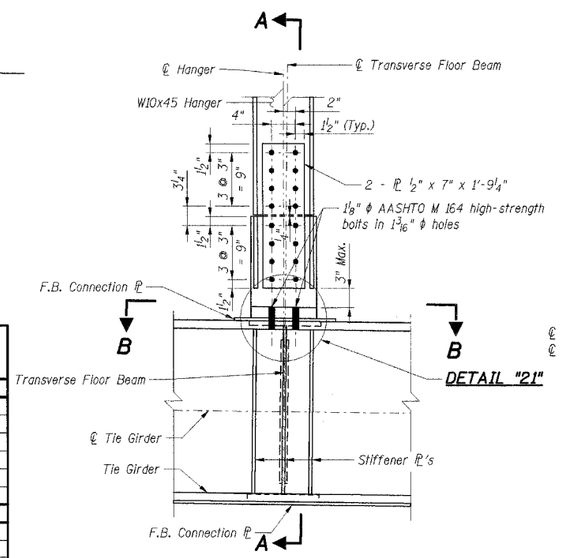

HANGER TO TIE GIRDER CONNECTION

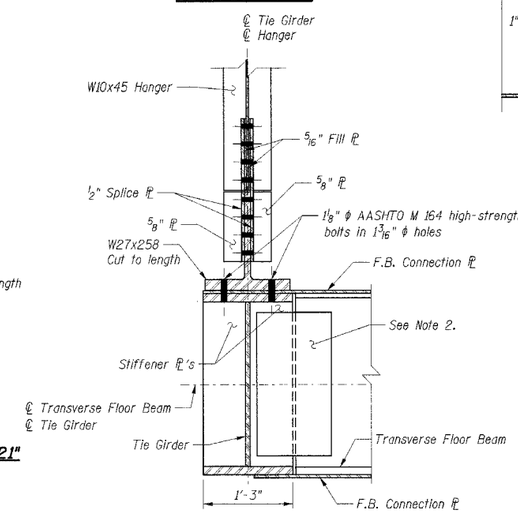

SECTION A-A

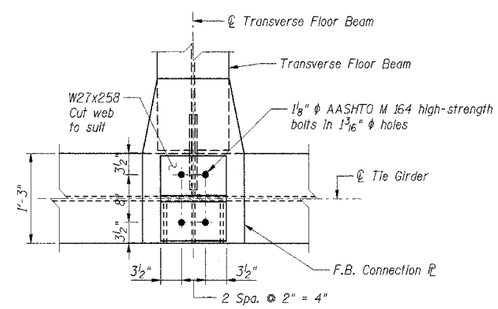

SECTION B-B

HANGER LENGTHS

Hanger	"$L_{Initial}$" (ft)	"L_{Final}" (ft)
East		
1	16.86	16.87
2	27.74	27.74
3	33.26	33.26
4	33.38	33.39
5	28.06	28.07
6	17.26	17.26
West		
1	17.02	17.02
2	27.83	27.83
3	33.29	33.30
4	33.35	33.36
5	27.97	27.98
6	17.10	17.11

Final Hanger Lengths are based on steel self-weight and deck slab.

Initial Hanger Lengths include camber.

Notes:

1. Fasteners for Hanger connections shall be ⅞" ϕ AASHTO M 164 high-strength bolts in 15/16" ϕ holes unless noted otherwise.
2. For Transverse Floor Beam to Tie Girder connections, see Sht. 39.

SHT. S-28 OF 40

REVISIONS	
NAME	DATE

CITY OF DANVILLE, ILLINOIS
HUNGRY HOLLOW ROAD BRIDGE

HANGER DETAILS

SCALE:
DATE 12/06/05
DRAWN BY LAR
CHECKED BY JRH

TENG

TENG & ASSOCIATES, INC.
ENGINEERS/ARCHITECTS/PLANNERS
205 N. MICHIGAN AVE. CHICAGO, IL 60601
TELEPHONE: 312/616-0600

ROSSPF

..\TTB0002F9.DGN,..\SUDOOP8.DGN
12-07-2005, 15:12:36
S:\DOCUMENT\00336902\STRUCTURGN\SUDOOP8.DGN

FAU RTE	SECTION	COUNTY	TOTAL SHEETS	SHEET NO.
7000	02-00212-00-BR	VERMILION	59	44
FROM STA. 96+00.00		TO STA. 103+10.10		
FED. ROAD DIST. NO.	ILLINOIS	FED. AID PROJECT		

CONTRACT NO. 91285

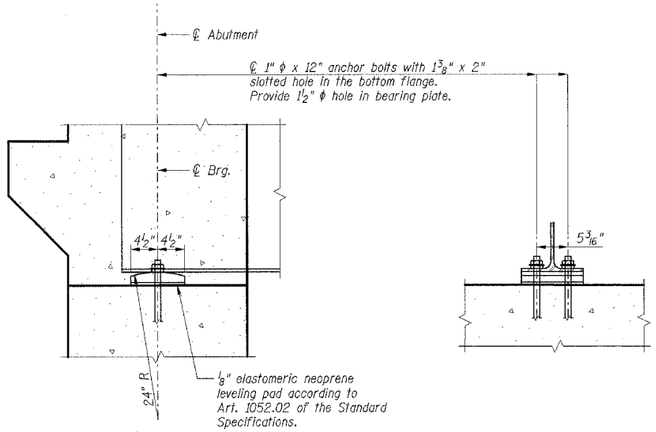

BEARING AT INTEGRAL ABUTMENT

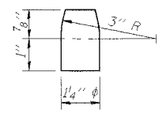

PINTLE

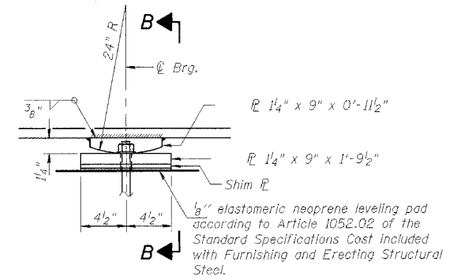

ELEVATION AT PIER

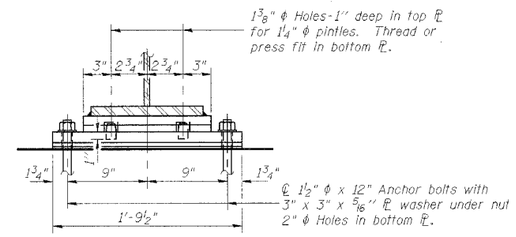

SECTION B-B

FIXED BEARING

Pier 1 and Pier 2 Approach Spans - 10 Thus Weight of steel included with total weight of structural steel.

Notes:

1. Steel plates for bearing assemblies shall conform to the requirements of AASTO M270 Grade 50.
2. Anchor bolts shall conform to ASTM F1554 Grade 105.
3. Anchor bolts at fixed bearings may be cast into the masonry.

SHT. S-29 OF 40

REVISIONS	
NAME	DATE

CITY OF DANVILLE, ILLINOIS
HUNGRY HOLLOW ROAD BRIDGE

BEARING DETAILS
APPROACH SPANS

SCALE: DRAWN BY LAR
DATE 12/06/05 CHECKED BY JRH

TENG

TENG & ASSOCIATES, INC.
ENGINEERS&SURVEYORS&PLANNERS
205 N. MICHIGAN AVE. CHICAGO, IL 60601
TELEPHONE 312-616-0000

ROSSPF
S:\DOCUMENT\02336902\STRUCT\DGN\BRG0002C.DGN
..\TT800029.DGN
12-07-2005, 13:23:35

FAU RTE	SECTION	COUNTY	TOTAL SHEETS	SHEET NO.
7000	02-00212-00-BR	VERMILION	59	45
FROM STA. 96+00.00		TO STA. 103+10.10		
FED. ROAD DIST. NO.	ILLINOIS	FED. AID PROJECT		

CONTRACT NO. 91285

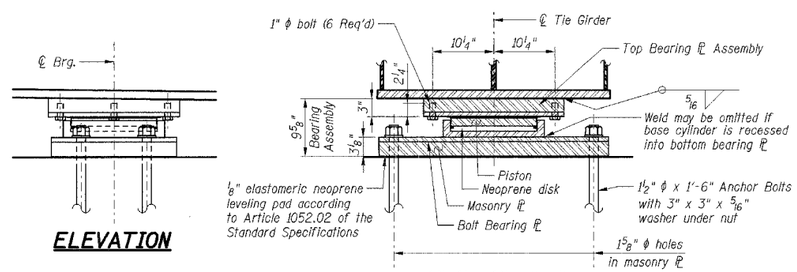

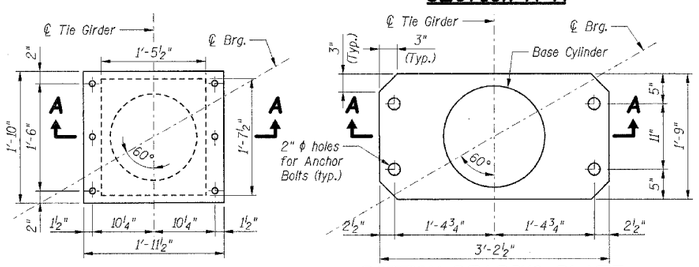

BEARING AT PIER 1 - WEST TIE GIRDER

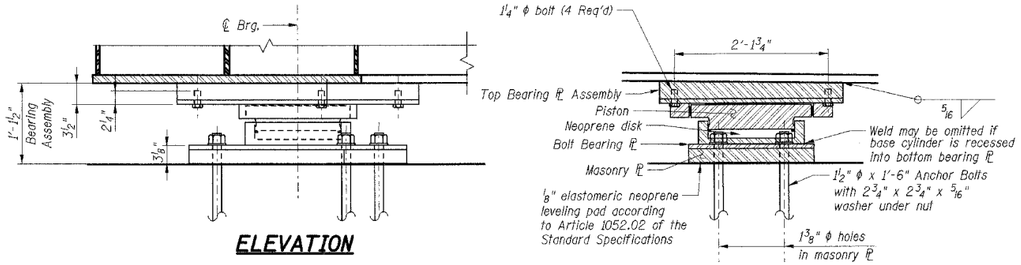

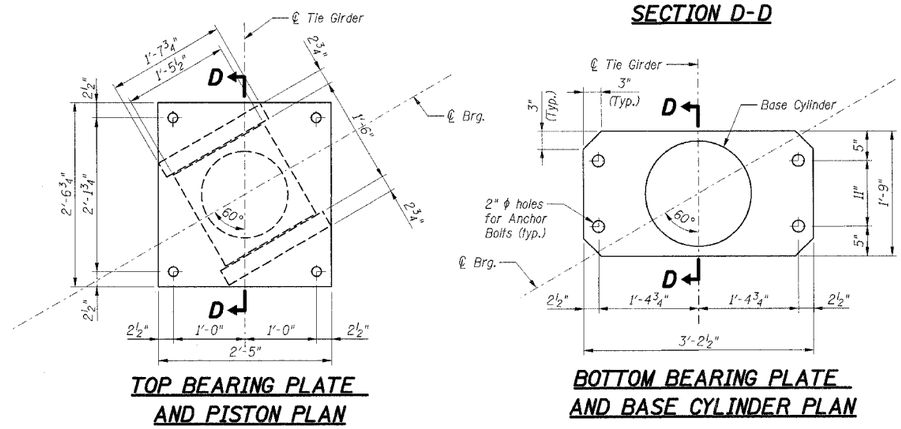

BEARING AT PIER 2 - WEST TIE GIRDER

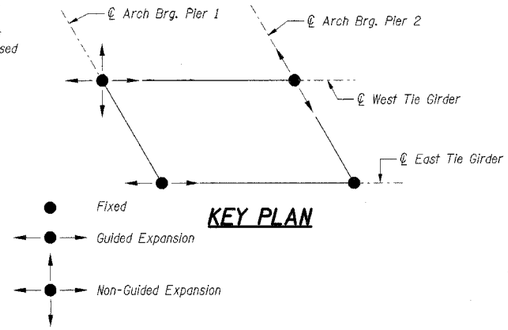

Notes:

1. Floating Bearing Assembly Design Parameters:

Location	Vertical Loads (kips)			
	Dead Load	Live Load	Impact Load	Horizontal Load
Pier 1 West	400	100	20	-
Pier 1 East	400	100	20	150
Pier 2 West	400	100	20	150
Pier 2 East	400	100	20	195

Longitudinal Movement: ±1" @ 75°F
Transverse Movement: ±⅜" @ 75°F
Total Rotation: 3%

2. All steel for floating bearings shall conform to the requirements of AASHTO M270 Grade 50, unless otherwise noted.
3. Anchor bolts shall be ASTM F1554 Gr 105.
4. Bolts shall be AASHTO M 253, Type 3.
5. The ⅛" TFE sheet shall be bonded directly to the piston with a two-component medium viscosity epoxy resin, conforming to the requirements of the Federal Specification MMM-A-134, Type I. The bond agent shall be applied to the full area of the contact surfaces.
6. The cost of furnishing anchor bolts, threaded studs, shim plates and elastomeric pads for floating bearing is included in the cost of furnishing floating bearings.
7. The dimensions and details shown for the floating bearings are for a specific manufacturer's product. See Specifications regarding changes to dimensions and details. Information not shown regarding the size of the bearing top plate, piston, and base assemblies shall be determined by the manufacturer and shall meet the requirements stated in Note 1 above.
8. The sliding coefficient of friction shall not exceed 3 percent. Certification of compliance to proof load and sliding coefficient of friction requirements in accordance with AASHTO 18.3.5.3. shall be provided with shop drawing submittal.
9. The bearing shall be blocked during the erection of structural steel.
10. The Contractor shall submit the Erection Procedure for approval by the Engineer. This work shall be included with the pay item for Floating Bearings.

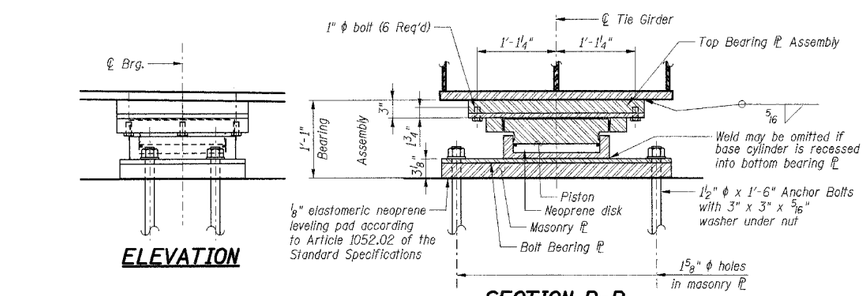

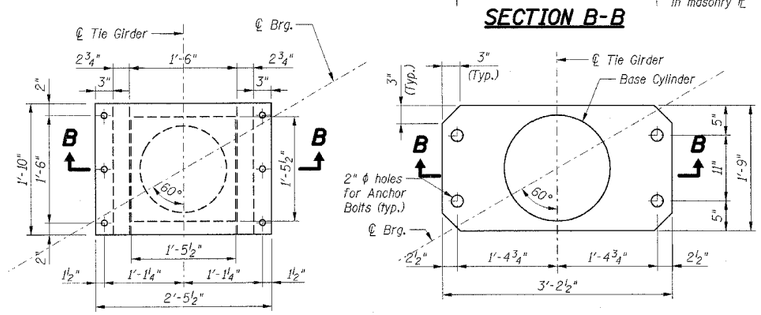

BEARING AT PIER 1 - EAST TIE GIRDER

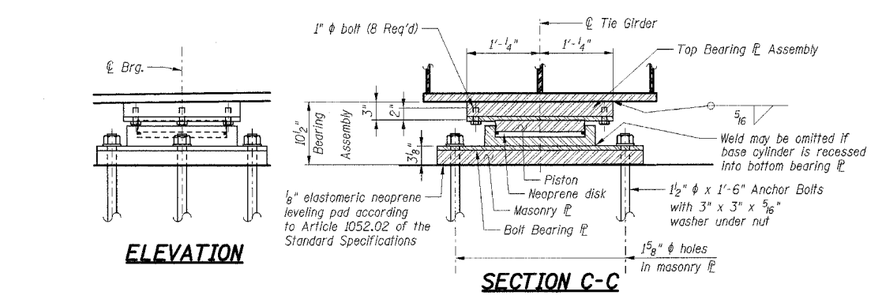

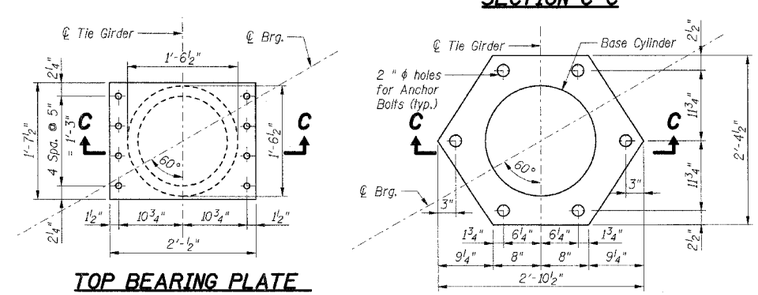

BEARING AT PIER 2 - EAST TIE GIRDER

BILL OF MATERIAL

Item	Unit	Total
Floating Bearings, Guided Expansion, 550k	Each	2
Floating Bearings, Fixed, 550k	Each	1
Floating Bearings, Non-Guided Expansion, 550k	Each	1

SHT. S-30 OF 40

REVISIONS	
NAME	DATE

CITY OF DANVILLE, ILLINOIS
HUNGRY HOLLOW ROAD BRIDGE

BEARING DETAILS
MAIN SPAN

SCALE: DRAWN BY LAR
DATE 12/06/05 CHECKED BY JRH

TENG

TENG & ASSOCIATES, INC.
ENGINEERS/ARCHITECTS/PLANNERS
205 N. MICHIGAN AVE. CHICAGO, IL 60601
TELEPHONE 312/616-0300

..\TTB00029.DGN,..\SMOOPV3.DGN,..\BMEOOPB.DGN,..\SBLOOP70.DGN,..\ALTOOPB3.DGN,..\FRPOOPSY.DGN
12-07-2005, 3:12:34 S:\DOCUMENT\02336902\STRUCTURE\DGN\SRCOOPB.DGN
ROSSPF

FAU RTE	SECTION	COUNTY	TOTAL SHEETS	SHEET NO.
7000	02-00212-00-BR	VERMILION	59	46
FROM STA. 96+00.00		TO STA. 103+10.10		
FED. ROAD DIST. NO.	ILLINOIS	FED. AID PROJECT		

CONTRACT NO. 91285

The Illinois Coil-Lock Anchor Bolt is a proprietary item which is the property of the Illinois Department of Transportation. Use, reproduction or disclosure without express written permission is prohibited and protected under Federal copyright laws. The production and the fabrication of this bolt for use on highway projects in the State of Illinois shall be permitted and there shall be no incurred charges or fees to the manufacturer or the fabricator for producing or fabricating this bolt.

D	E	H	K	"d"
1"	1 1/8"	13/16"	1 3/4"	1/4"
1 1/4"	1 3/8"	1 1/16"	2"	3/8"
1 1/2"	1 5/8"	1 5/16"	2 1/8"	1/2"
2"	2 1/8"	1 13/16"	2 7/8"	1/2"
2 1/2"	2 5/8"	2 5/16"	3 3/8"	1"

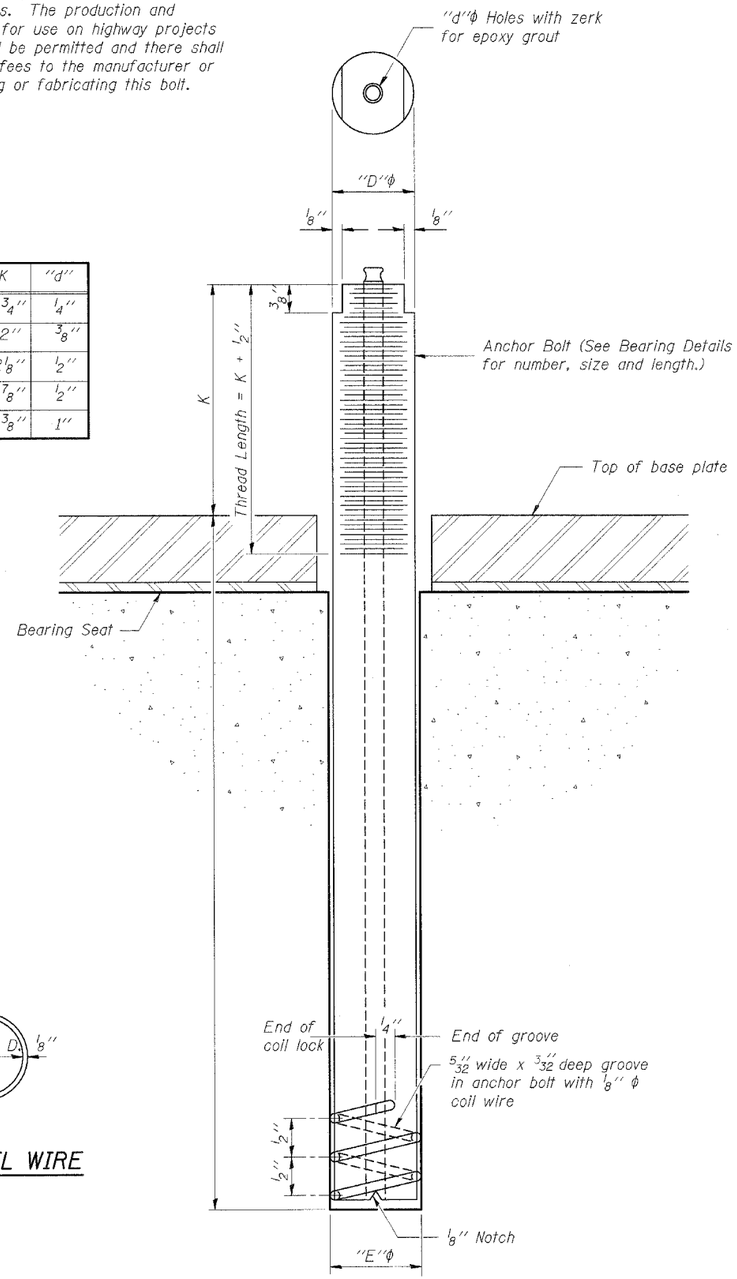

ILLINOIS COIL-LOCK ANCHOR BOLT

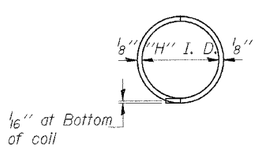

PLAN-COIL WIRE

MATERIALS FOR ILLINOIS COIL-LOCK ANCHOR BOLT

The anchor bolt shall be fabricated from cold drawn or hot finished seamless carbon steel mechanical tubing conforming to ASTM A 519, Grade 1026, CW and supplied with hexagonal nuts and cut washers.

The coil wire shall be made of any suitable soft steel wire.

The finished anchor bolt shall be cleaned of rust and other foreign materials and wrapped or packaged to prevent contamination until they are installed.

The epoxy grout shall be a two-component, epoxy resin bonding system conforming to ASTM C 881, Type I, Grade 1 and of a Class suitable for the temperature at installation.

INSTALLATION PROCEDURE for the ILLINOIS COIL-LOCK ANCHOR BOLT

1. With the coil wire in place, the bolt shall be inserted into the hole and turned clockwise to a snug fit in the hole. Nut and washer shall be placed on the bolt. The nut shall be tensioned until the steel base plates are held securely to the concrete bearing seat.
2. Epoxy grout shall be pumped through the zerk fitting with a pressure gun. Pumping shall continue until the epoxy overflows the hole around the bolt shank. After pumping is discontinued, excess epoxy shall be immediately wiped off.

ALTERNATE ANCHOR BOLTS

The Contractor may use, at his option, the capsule or the adhesive cartridge type anchor rods that have been previously tested and given a prior approval by the Department. The Contractor shall install these anchor rods in pre-drilled holes according to the manufacturer's recommendations and procedures.

The capsule or the adhesive cartridge type anchor rods shall be a two part system composed of:

1. A threaded rod stud with nut and washer of the type specified.
2. A sealed glass capsule or a sealed glass adhesive cartridge containing premeasured amounts of the adhesive chemical.

Location	Type
All	A307

ASTM F 1554 Grade 105. ASTM A 449 and AASHTO M 314 Grade 105 anchor bolts may be substituted for the anchor bolts shown above.

GENERAL NOTES

Holes in the masonry for anchor bolts shall be drilled through the base plates to the diameter and depth shown or according to the manufacturer's recommendation after beams or girders have been erected and adjusted.

Prior to setting the bolts, the holes shall be dry and all dust and loose particles shall be removed by the use of compressed air or vacuuming.

The anchor bolts, furnished and installed and including the epoxy grout or capsules shall not be paid for separately but shall be included in the unit bid price for "Furnishing and Erecting Structural Steel".

SHT. S-31 OF 40

REVISIONS NAME	DATE

CITY OF DANVILLE, ILLINOIS
HUNGRY HOLLOW ROAD BRIDGE

ANCHOR BOLT DETAILS

SCALE: DRAWN BY LAR
DATE 12/06/05 CHECKED BY JRH

TENG

TENG & ASSOCIATES, INC.
ENGINEERS/ARCHITECTS/PLANNERS
203 N. MICHIGAN AVE. CHICAGO, IL 60601
TELEPHONE 312/616-0300

..\TTB00079.DGN 12-07-2005,13:23 S:\DOCUMENT\02336302\STRUCT\DGN\ABLOOPBV.DGN ROSSPF

FAU RTE	SECTION	COUNTY	TOTAL SHEETS	SHEET NO.
7000	02-00212-00-BR	VERMILION	59	47
FROM STA. 96+00.00		TO STA. 103+10.10		
FED. ROAD DIST. NO.	ILLINOIS	FED. AID PROJECT		

CONTRACT NO. 91285

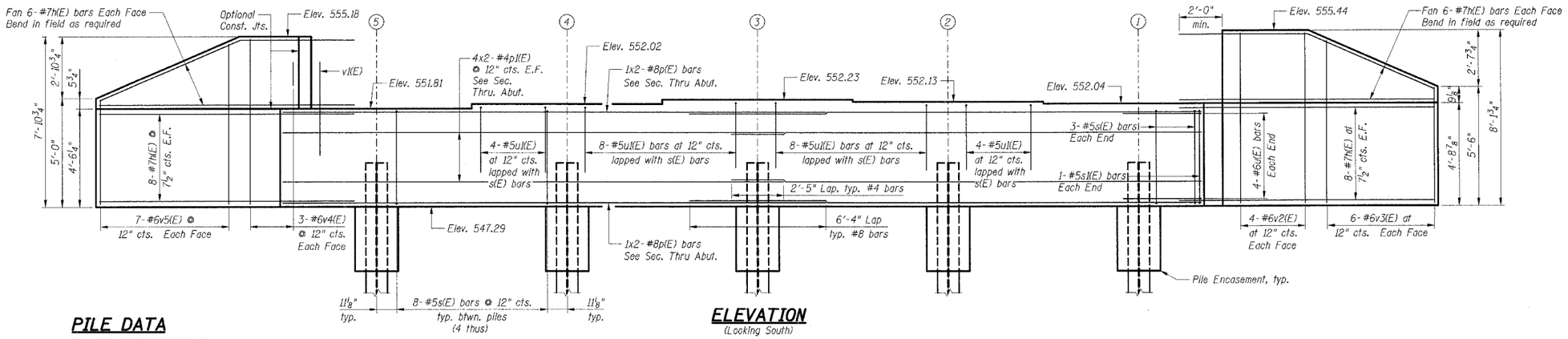

ELEVATION
(Looking South)

PILE DATA
Type: HP 12x53 with Metal Shoes
Capacity: 139.5 k
Est. Length: 25 ft
No. Required: 4 + 1 Test Pile

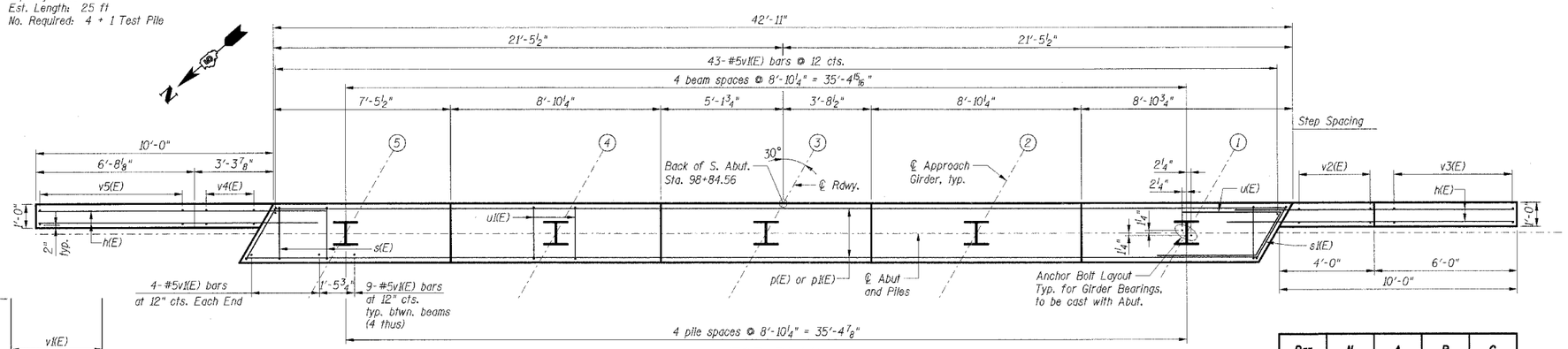

TOP PLAN

BAR LIST

Bar	No.	Size	Length	Shape
h(E)	56	#7	12'-6"	——
p(E)	8	#8	25'-3"	——
p1(E)	16	#4	23'-4"	——
s(E)	38	#5	14'-0"	☐
s1(E)	2	#5	14'-9"	☐
u(E)	8	#6	9'-7"	⊐
u1(E)	24	#5	8'-2"	⊐
v1(E)	87	#6	4'-4"	——
v2(E)	8	#6	7'-11"	——
v3(E)	6	#6	12'-10"	——
v4(E)	6	#6	7'-8"	——
v5(E)	7	#6	12'-3"	——

BILL OF MATERIAL

Item	Unit	Total
Porous Granular Embankment (Special)	Cu Yd	89
Concrete Structures	Cu Yd	24
Reinforcement Bars, Epoxy Coated	Lbs	4,100
Geocomposite Wall Drain	Sq Yd	47
Pipe Underdrains for Structures	Ft	82
Structure Excavation	Cu Yd	129

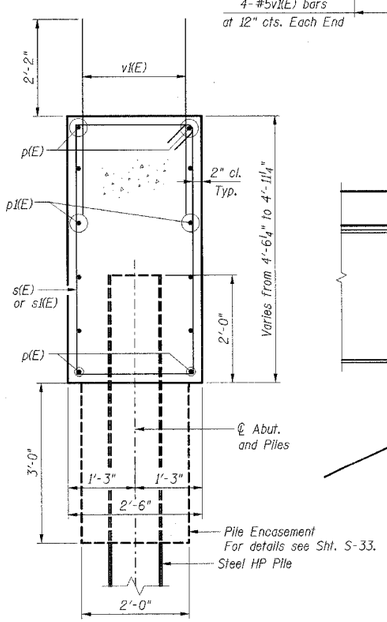

TYPICAL ABUTMENT SECTION
(Showing Geometry and Reinforcement)

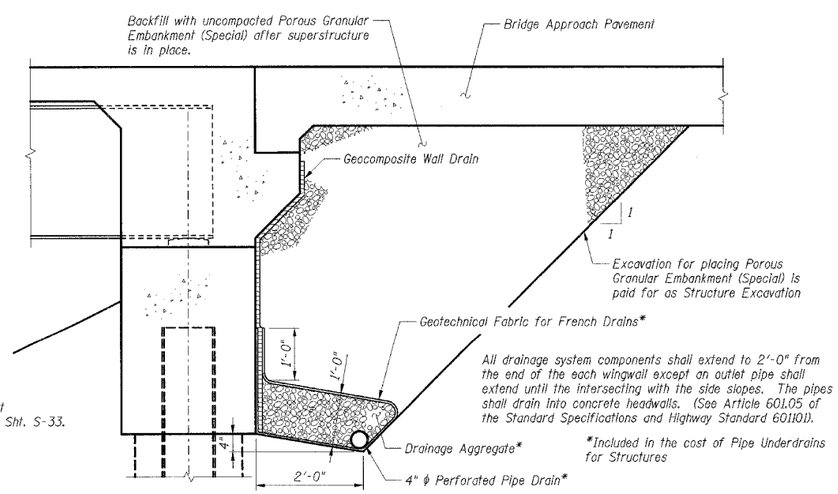

All drainage system components shall extend to 2'-0" from the end of the each wingwall except an outlet pipe shall extend until the intersecting with the side slopes. The pipes shall drain into concrete headwalls. (See Article 601.05 of the Standard Specifications and Highway Standard 601101).

*Included in the cost of Pipe Underdrains for Structures

TYPICAL ABUTMENT SECTION
(Showing Drainage)

Bar	N	A	B	C
v3(E)	6	12'-10"	5'-4"	7'-6"
v5(E)	7	12'-3"	4'-10"	7'-5"

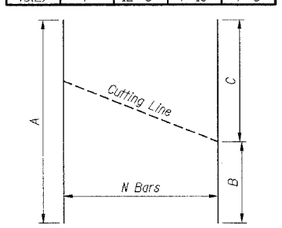

CUTTING DIAGRAM
Order v3(E) & v5(E) bars full length. Cut as shown and use remainder in opposite face.

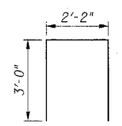

BAR u1(E)

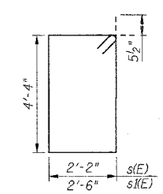

BAR s(E) & s1(E)

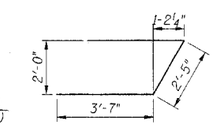

BAR u(E)

Notes:
1. Pour steps monolithically with cap.
2. Reinforcement bars designated (E) shall be epoxy coated.
3. Bars indicted thus 20x3-#5 etc. indicates 20 lines of bars with 3 lengths per line.
4. See Sht. S-33 for Pile Encasement details.
5. For anchor bolt details see Sheet S-31.

SHT. S-32 OF 40

REVISIONS	
NAME	DATE

CITY OF DANVILLE, ILLINOIS
HUNGRY HOLLOW ROAD BRIDGE

SOUTH ABUTMENT
PLAN, ELEVATION & SECTION

SCALE:
DATE 12/06/05
DRAWN BY LAR
CHECKED BY JRH

TENG
TENG & ASSOCIATES, INC.
ENGINEERS/ARCHITECTS/PLANNERS
205 N. MICHIGAN AVE. CHICAGO, IL 60601
TELEPHONE: 312/616-0040

..\TB0002A.DGN,..\CPEQOPTX.DGN,..\VPROOPSY.DGN,..\DKFOOPBS.DGN,..\PROOPRA.DGN,..\PROOPSL.DGN,..\ABTOOPDX.DGN,..\ABTOOPBW.DGN
12-07-2005, 13:23:32 S:\DOCUMENT\02336902\STRUCT\DGN\ABTOOPBW.DGN
ROSSPF

FAU RTE	SECTION	COUNTY	TOTAL SHEETS	SHEET NO.
7000	02-00212-00-BR	VERMILION	59	48
FROM STA. 96+00.00		TO STA. 103+10.10		
FED. ROAD DIST. NO.	ILLINOIS	FED. AID PROJECT		

CONTRACT NO. 91285

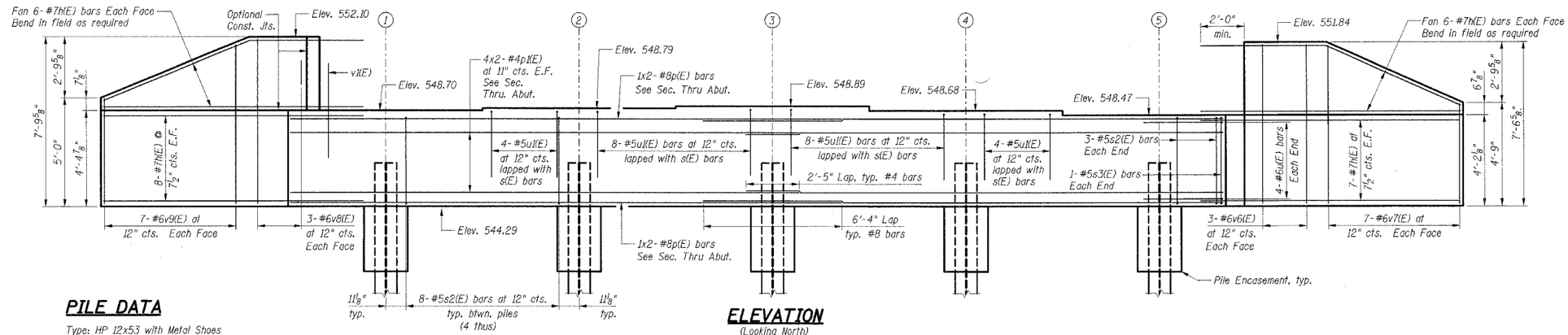

ELEVATION
(Looking North)

PILE DATA

Type: HP 12x53 with Metal Shoes
Capacity: 139.5
Est. Length: 25 ft
No. Required: 4 + 1 Test Pile

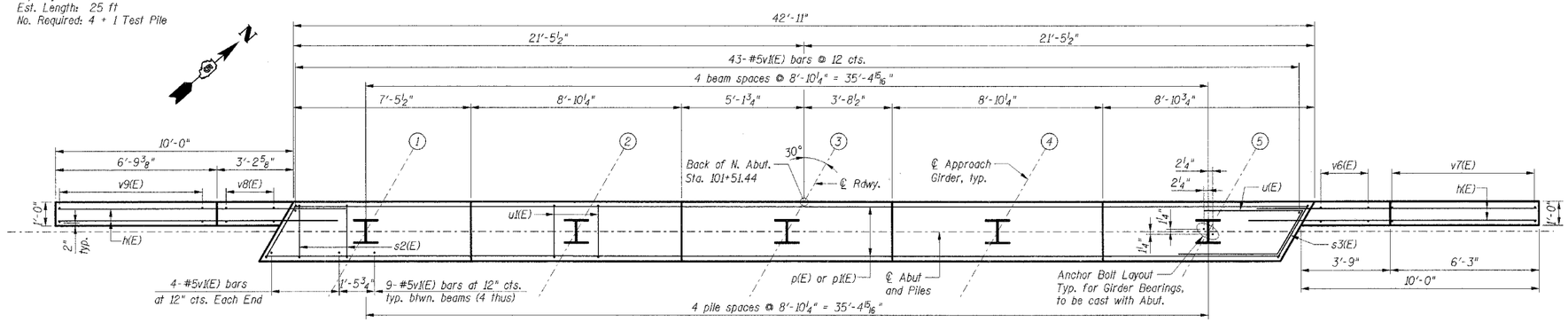

TOP PLAN

BAR LIST

Bar	No.	Size	Length	Shape
h(E)	54	#7	12'-6"	——
p(E)	8	#8	25'-3"	——
p1(E)	16	#4	23'-4"	——
s2(E)	38	#5	13'-4"	□
s3(E)	2	#5	14'-0"	□
u(E)	8	#6	9'-7"	⊐
u1(E)	24	#5	8'-2"	⊐
v1(E)	87	#6	4'-4"	——
v6(E)	6	#6	7'-4"	——
v7(E)	7	#6	11'-10"	——
v8(E)	6	#6	7'-7"	——
v9(E)	7	#6	12'-2"	——

BILL OF MATERIAL

Item	Unit	Total
Porous Granular Embankement (Special)	Cu Yd	89
Structure Excavation	Cu Yd	129
Concrete Structures	Cu Yd	26
Reinforcement Bars, Epoxy Coated	Lbs	4,000
Geocomposite Wall Drain	Sq Yd	47
Pipe Underdrains for Structures	Ft	82

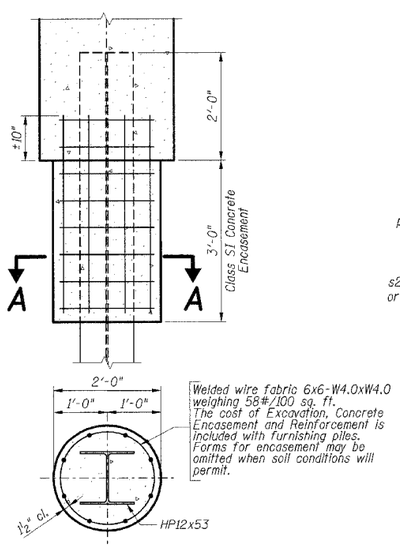

SECTION A-A
PILE ENCASEMENT

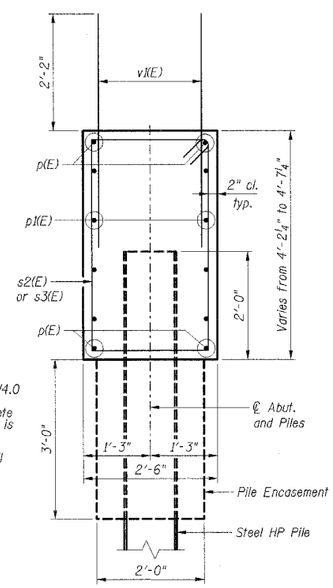

TYPICAL ABUTMENT SECTION
(Showing Geometry and Reinforcement)

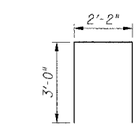

BAR u1(E)

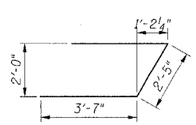

BAR u(E)

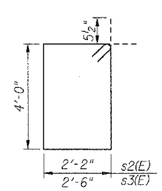

BARS s2(E) & s3(E)

Bar	N	A	B	C
v7(E)	7	11'-10"	4'-7"	7'-3"
v9(E)	7	12'-2"	4'-10"	7'-4"

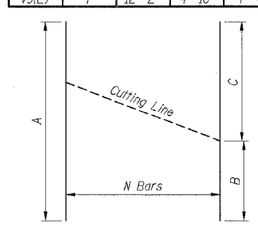

CUTTING DIAGRAM
Order v7(E) & v9(E) bars full length. Cut as shown and use remainder in opposite face.

Notes:
1. Pour steps monolithically with cap.
2. Reinforcement bars designated (E) shall be epoxy coated.
3. For drainage details behind abutment, see Sht. S-32.
4. Bars indicated thus 20x3-#5 etc. indicates 20 lines of bars with 3 lengths per line.
5. For anchor bolt details see Sheet S-31.

SHT. S-33 OF 40

REVISIONS	
NAME	DATE

CITY OF DANVILLE, ILLINOIS
HUNGRY HOLLOW ROAD BRIDGE

NORTH ABUTMENT
PLAN, ELEVATION & SECTION

SCALE:
DATE 12/06/05
DRAWN BY LAR
CHECKED BY JRH

TENG
TENG & ASSOCIATES, INC.
ENGINEERS/ARCHITECTS/PLANNERS
205 N. MICHIGAN AVE. CHICAGO, IL 60601
TELEPHONE 312/616-1000

..\TIB00029.DGN,..\ABTOOPDX.DGN
12-07-2005, 13:12:32
S:\DOCUMENT\02336902\STRUCT\DGN\ABTOOPDX.DGN
ROSSPF

FAU RTE	SECTION	COUNTY	TOTAL SHEETS	SHEET NO.
7000	02-00212-00-BR	VERMILION	59	49
FROM STA. 96+00.00		TO STA. 103+10.10		
FED. ROAD DIST. NO.	ILLINOIS	FED. AID PROJECT		

CONTRACT NO. 91285

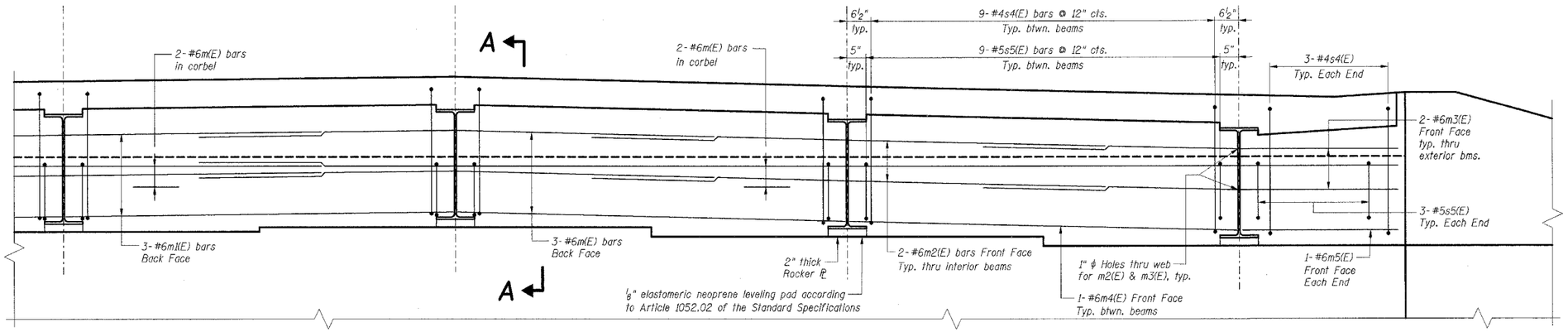

DIAPHRAGM ELEVATION AT ABUTMENT

Notes:

1. Reinforcement bars in diaphragm are billed with superstructure on Sheet S-12.
2. Concrete in diaphragm is included with Concrete Superstructure on Sheet S-12.
3. For details of bars s4(E) & s5(E) see Sheet S-12
4. The s4(E) and s5(E) bars shall be placed parallel to the beams. Spacing for these bars shall be at right angles to the beams.

MIN. BAR LAP

#6 bar = 2'-9"

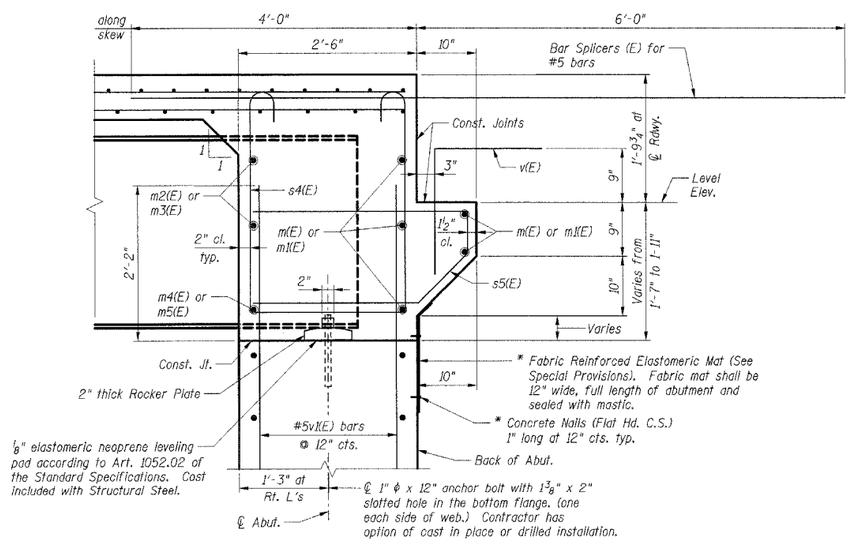

SECTION A-A

Dimensions at right angles to abutment, except as shown.
* Cost included with Concrete Superstructure

SHT. S-34 OF 40

REVISIONS	
NAME	DATE

CITY OF DANVILLE, ILLINOIS
HUNGRY HOLLOW ROAD BRIDGE

ABUTMENT DIAPHRAGM ELEVATION & SECTION

SCALE: ⅜"=1'
DATE 12/06/05

DRAWN BY LAR
CHECKED BY JRH

TENG

TENG & ASSOCIATES, INC.
ENGINEERS/ARCHITECTS/PLANNERS
205 N. MICHIGAN AVE. CHICAGO, IL 60601
TELEPHONE: 312/616-1000

R05SPF

\\TT300029.DGN\..\ABTDPR8.DGN
12-07-2005,13:28:31
S:\DOCUMENT\02336902\STRUCTVDGN\ABTDPR8X.DGN

FAU RTE	SECTION	COUNTY	TOTAL SHEETS	SHEET NO.
7000	02-00212-00-BR	VERMILION	59	50
FROM STA. 96+00.00		TO STA. 103+10.10		
FED. ROAD DIST. NO.	ILLINOIS	FED. AID PROJECT		

CONTRACT NO. 91285

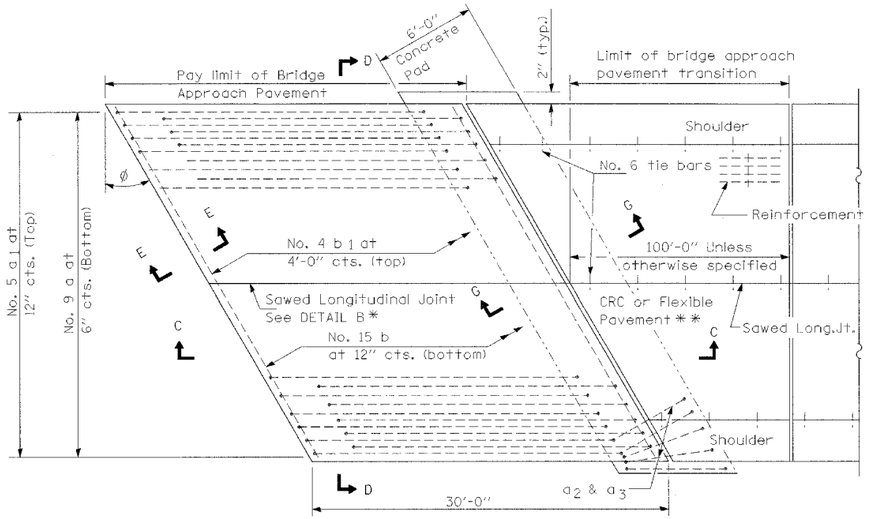

PLAN - WITH SKEW

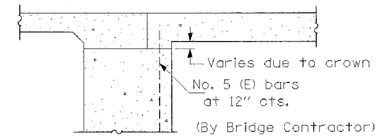

SECTION E-E
(Integral Abutments)

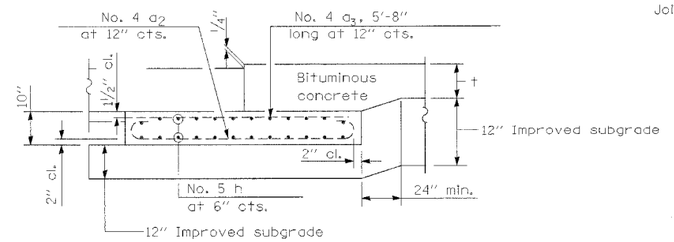

SECTION G-G - FLEXIBLE PAVEMENT
(Showing reinforcement)

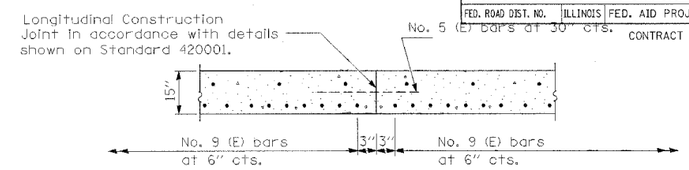

OPTIONAL LONGITUDINAL CONSTRUCTION JOINT

As approved by the Engineer, the Contractor may elect to reduce the widths of pour by use of the Optional Longitudinal Construction Joint shown. Joints shall be located at the edge of a traffic lane.

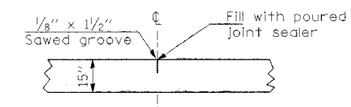

DETAIL B*

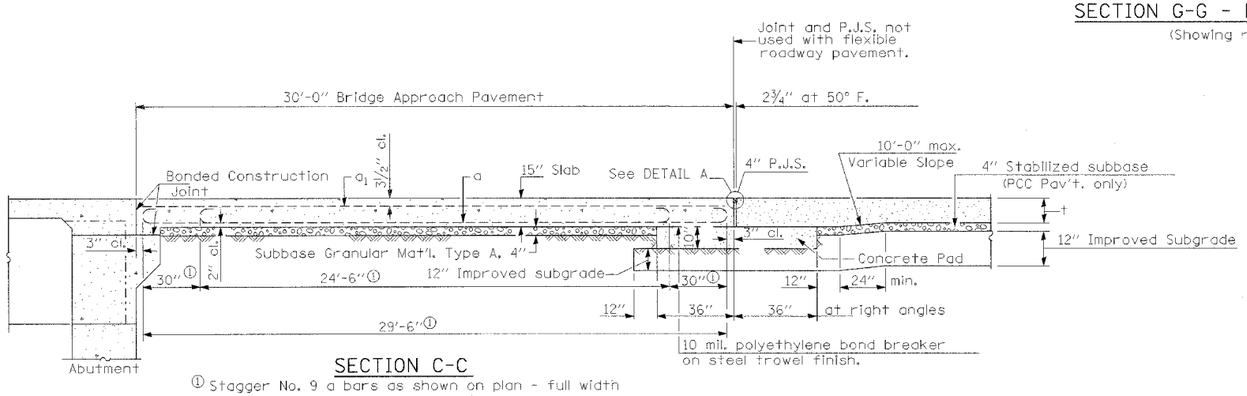

SECTION C-C
① Stagger No. 9 a bars as shown on plan - full width

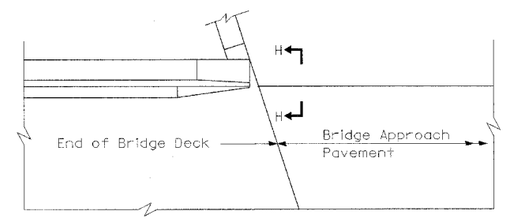

PARAPET TO CURB TRANSITION
INTEGRAL ABUTMENT

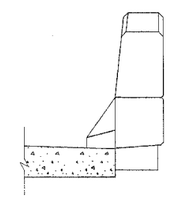

SECTION H - H

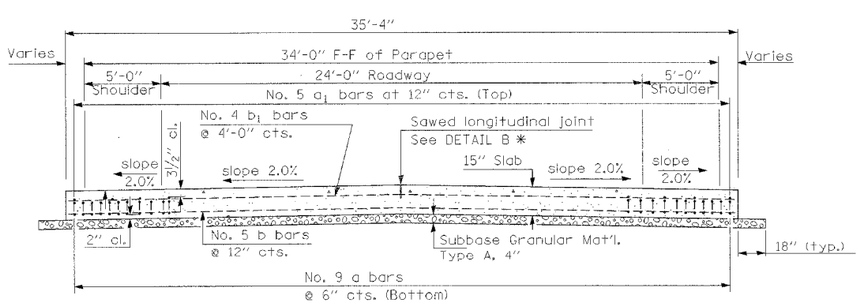

SECTION D-D
(See Plan for Dimensions not shown)
All reinforcement bars shall be epoxy coated.

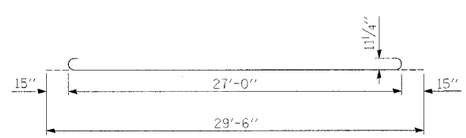

BAR a

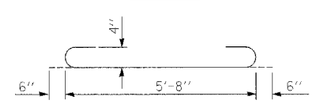

BAR a2

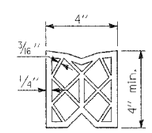

PREFORMED JOINT SEAL

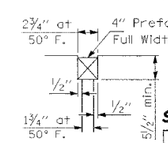

DETAIL A

DESIGN STRESSES
fy = 60,000 p.s.i.
f'c = 3,500 p.s.i.
n = 8.5

GENERAL NOTES

THICKNESS-"t"=Thickness of Pavement.

All dimensions are in inches unless otherwise shown.

SHT. S-35 OF 40

REVISIONS	
NAME	DATE

CITY OF DANVILLE, ILLINOIS
HUNGRY HOLLOW ROAD BRIDGE

APPROACH SLAB
PLAN & DETAILS

SCALE: 1/4"=1'
DATE 12/06/05
DRAWN BY LAR
CHECKED BY JRH

TENG
TENG & ASSOCIATES, INC.
ENGINEERS/ARCHITECTS/PLANNERS
303 N. MICHIGAN AVE. CHICAGO, IL 60601
TELEPHONE 312.616.1000

ROSSPF
S:\DOCUMENT\02336302\STRUCTUGN\APS00F8Y.DGN
..\TTB0002S.DGN
12-07-2005, 13:12:30

FAU RTE	SECTION	COUNTY	TOTAL SHEETS	SHEET NO.
7000	02-00212-00-BR	VERMILION	59	51
FROM STA. 96+00.00		TO STA. 103+10.10		
FED. ROAD DIST. NO.	ILLINOIS	FED. AID PROJECT		

CONTRACT NO. 59285

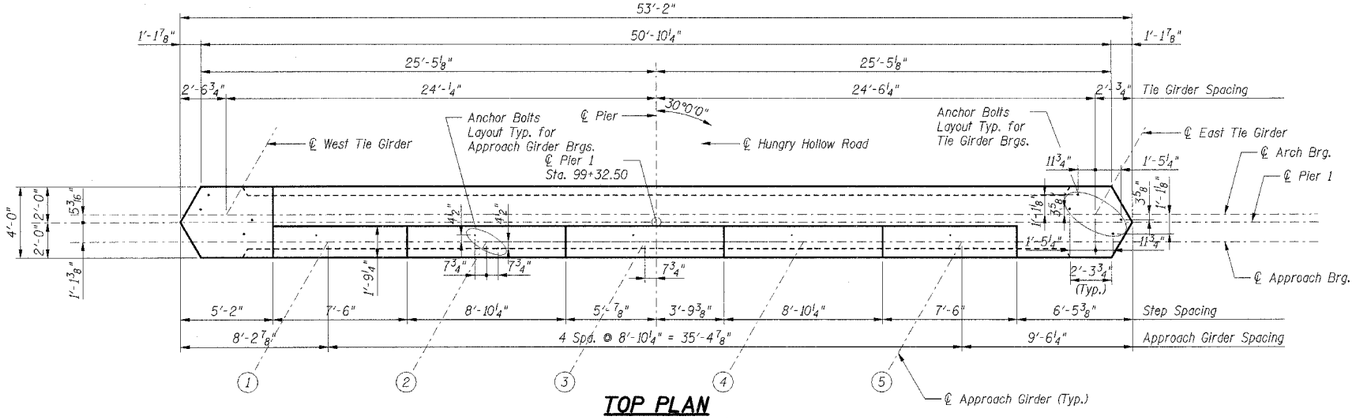

TOP PLAN

Bearing Seat Elevations

Approach Girder	Elevation
1	551.41
2	551.51
3	551.60
4	551.39
5	551.19

Bearing Seat Elevations

Tie Girder	Elevation
West	550.67
East	550.14

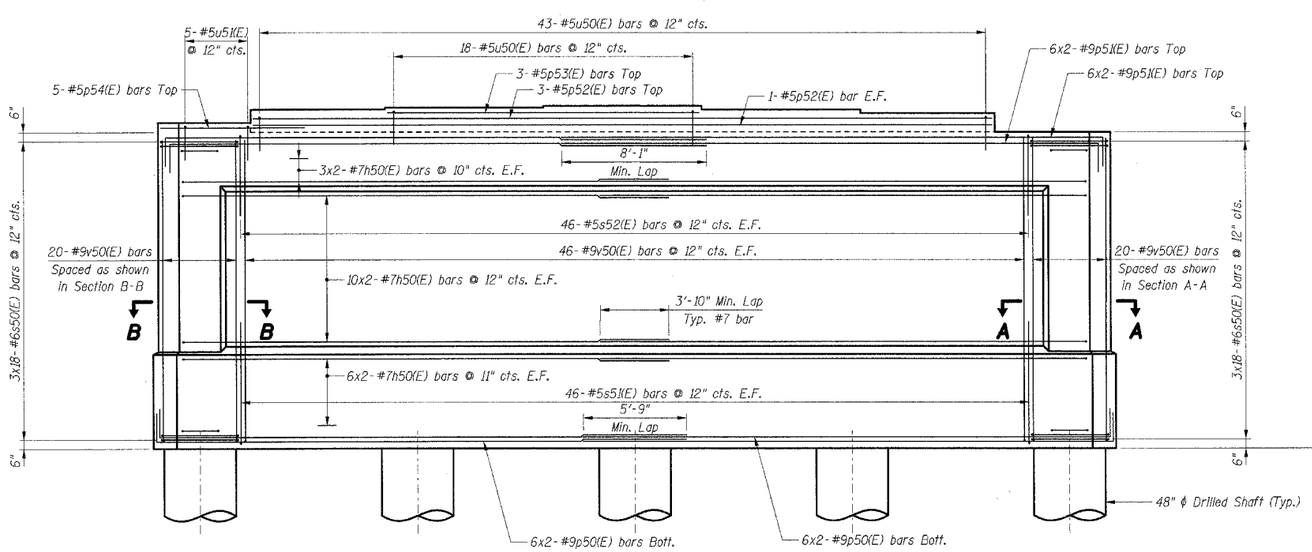

ELEVATION

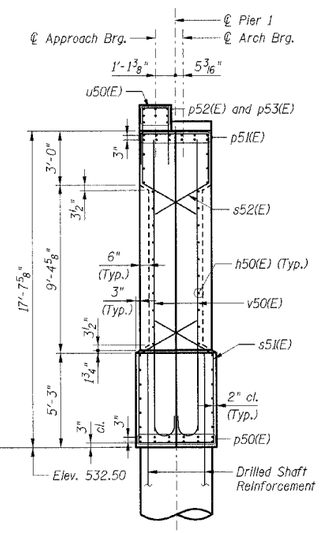

END VIEW

(Looking West)

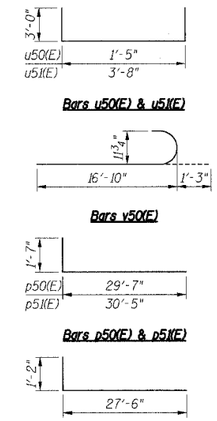

BAR LIST

Bar	No.	Size	Length	Shape
h50(E)	76	#7	28'-8"	
p50(E)	24	#9	31'-2"	
p51(E)	24	#9	32'-0"	
p52(E)	5	#5	41'-2"	
p53(E)	3	#5	17'-4"	
p54(E)	5	#5	9'-6"	
s50(E)	108	#6	12'-11"	
s51(E)	46	#5	20'-10"	
s52(E)	46	#5	15'-10"	
u50(E)	61	#5	7'-5"	
u51(E)	5	#5	8'-2"	
v50(E)	132	#9	18'-1"	

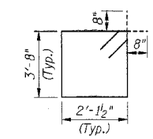

Bar s50(E)

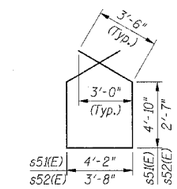

Bars s51(E) & s52(E)

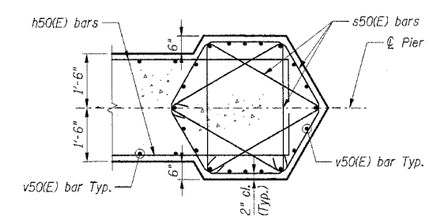

SECTION A-A

(Section B-B Similar - Opposite Hand)

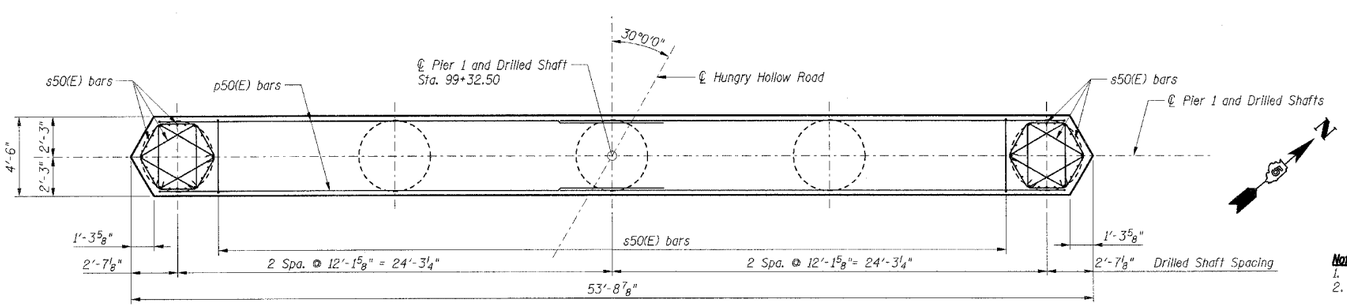

DRILL SHAFT CAP PLAN

BILL OF MATERIALS

Item	Unit	Total
Structure Excavation	Cu Yd	2
Concrete Structures	Cu Yd	129.5
Reinforcement Bars, Epoxy Coated	Lbs	22,410
Bridge Seat Sealer	Sq Yd	23

Notes:

1. Reinforcement Bars designated (E) shall be epoxy coated.
2. Bars indicated thus: 4x2-#5 etc. indicate 4 lines of bars with 2 lengths per line.
3. Space reinforcement in pier to miss anchor bolts.
4. All edges shall have standard ¾" chambers except as noted.
5. Pour steps montolithically with pier cap.
6. E.F. indicates Each Face.
7. For drilled shaft details, see Sht. S-06.

SHT. S-36 OF 40

REVISIONS	
NAME	DATE

CITY OF DANVILLE, ILLINOIS
HUNGRY HOLLOW ROAD BRIDGE

PIER 1

SCALE:
DATE 12/06/05
DRAWN BY TMH
CHECKED BY JRH

TENG

TENG & ASSOCIATES, INC.
ENGINEERS ARCHITECTS PLANNERS
303 N. MICHIGAN AVE. CHICAGO, IL 60601
TELEPHONE: 312/616-0600

..\SBLOOP70.DGN, ..\FRROOP5Y.DGN, ..\ALTOOP83.DGN, ..\BMEOOP8L.DGN, ..\DKPOOP5J.DGN, ..\GPEOOP7X.DGN, ..\GCNOOPFG.DGN, ..\TTB00073.DGN, ..\PROGPRA.DGN, ..\PROOPRA.DGN, ..\PROOP5L.DGN
ROSSPF
12-07-2005, 13:29
S:\DOCUMENT\02336902\STRUCTUGN\PROOPRA.DGN

FAU RTE	SECTION	COUNTY	TOTAL SHEETS	SHEET NO.
7000	02-00212-00-BR	VERMILION	59	52
FROM STA. 96+00.00		TO STA. 103+10.10		
FED. ROAD DIST. NO.	ILLINOIS	FED. AID PROJECT		

CONTRACT NO.591285

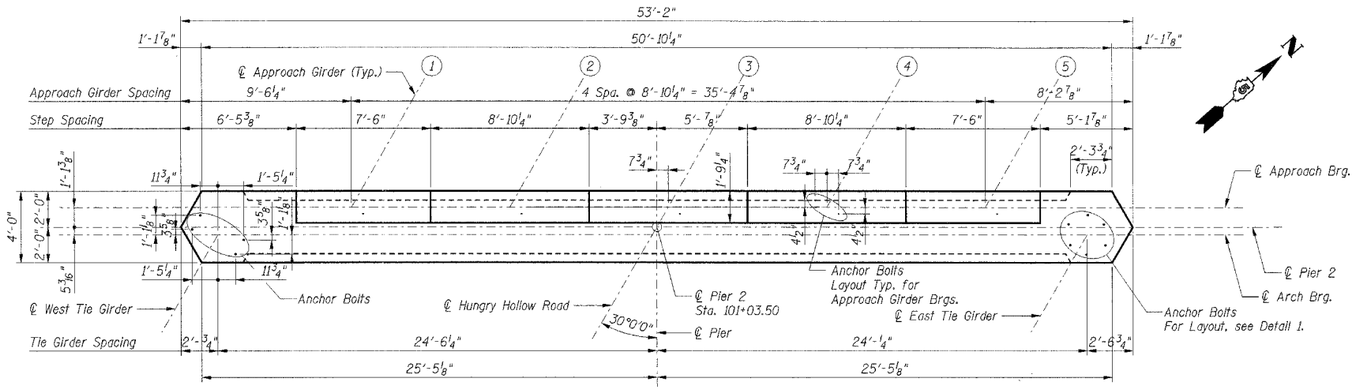

TOP PLAN

Bearing Seat Elevations

Approach Girder	Elevation
1	549.24
2	549.33
3	549.43
4	549.22
5	549.01

Bearing Seat Elevations

Tie Girder	Elevation
West	548.21
East	548.21

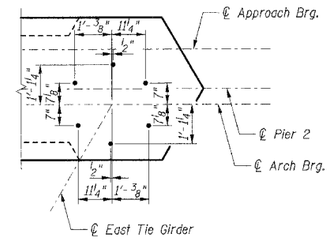

DETAIL 1

BAR LIST

Bar	No.	Size	Length	Shape
h50(E)	80	#7	28'-8"	
p50(E)	24	#9	31'-2"	
p51(E)	24	#9	32'-0"	
p52(E)	5	#5	41'-2"	
p53(E)	3	#5	17'-4"	
s50(E)	114	#6	12'-11"	
s51(E)	46	#5	20'-10"	
s52(E)	46	#5	15'-10"	
u50(E)	61	#5	7'-5"	
v51(E)	132	#9	19'-0"	

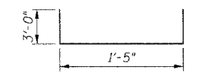

Bar u50(E)

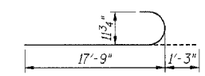

Bars v51(E)

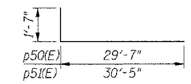

Bars p50(E) & p51(E)

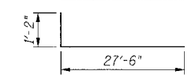

Bar h50(E)

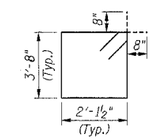

Bar s50(E)

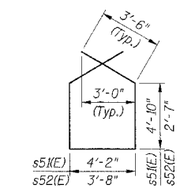

Bars s51(E) & s52(E)

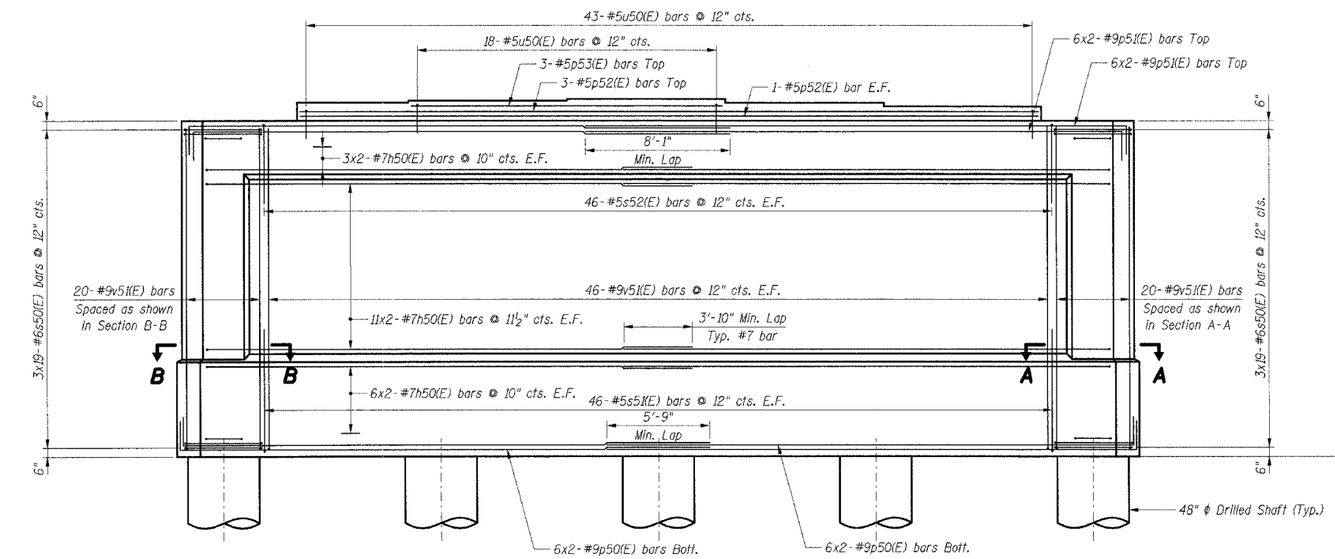

ELEVATION

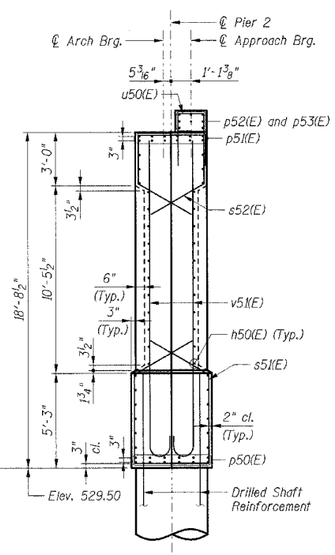

END VIEW

(Looking West)

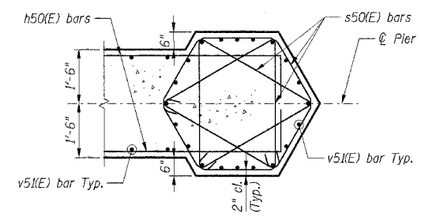

SECTION A-A

(Section B-B Similar - Opposite Hand)

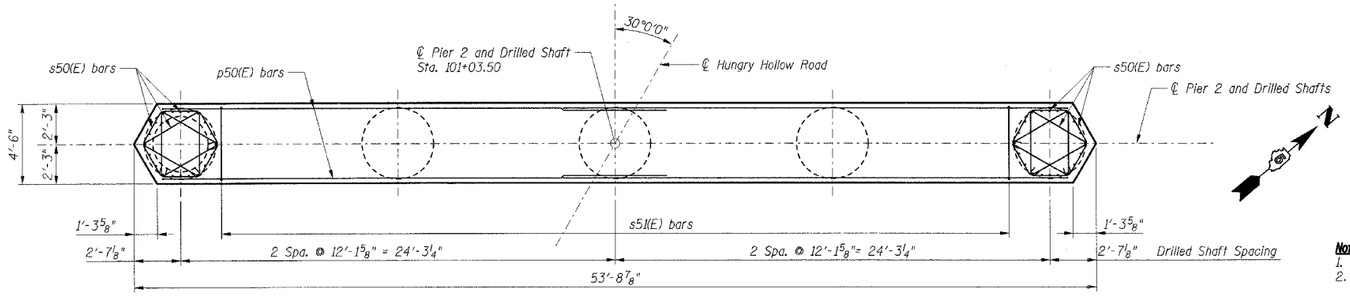

DRILL SHAFT CAP PLAN

BILL OF MATERIALS

Item	Unit	Total
Structure Excavation	Cu Yd	39
Concrete Structures	Cu Yd	135.2
Reinforcement Bars, Epoxy Coated	Lbs	23,080
Bridge Seat Sealer	Sq Yd	23

Notes:

1. Reinforcement Bars designated (E) shall be epoxy coated.
2. Bars indicated thus: 4x2-#5 etc. indicate 4 lines of bars with 2 lengths per line.
3. Space reinforcement in pier to miss anchor bolts.
4. All edges shall have standard ¾" chambers except as noted.
5. Pour steps montolithically with pier cap.
6. E.F. indicates Each Face.
7. For drilled shaft details, see Sht. S-06.

SHT. S-37 OF 40

REVISIONS	
NAME	DATE

CITY OF DANVILLE, ILLINOIS
HUNGRY HOLLOW ROAD BRIDGE

PIER 2

SCALE: DRAWN BY TMH
DATE 12/06/05 CHECKED BY JRH

TENG
TENG & ASSOCIATES, INC.
ENGINEERS/ARCHITECTS/PLANNERS
303 N. MICHIGAN AVE. CHICAGO, IL 60601
TELEPHONE 312/616-0600

..\SBL00P70.DGN,..\FR00P5Y.DGN,..\ALT00F83.DGN,..\TT8900Z9.DGN,..\PR00P8A.DGN,..\CON00PF6.DGN,..\PR00P5L.DGN,..\BRG00P8L.DGN R03SPF
S:\DOCUMENT\02336902\STRUCTV\DGN\PR00P5L.DGN
12-07-2005, 8:42:28

FAU RTE	SECTION	COUNTY	TOTAL SHEETS	SHEET NO.
7000	02-00212-00-BR	VERMILION	59	53
FROM STA. 96+00.00		TO STA. 103+10.10		
FED. ROAD DIST. NO.	ILLINOIS	FED. AID PROJECT		

CONTRACT NO. 91285

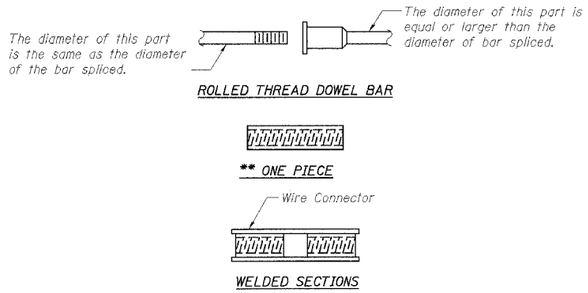

BAR SPLICER ASSEMBLY ALTERNATIVES

** Heavy Hex Nuts conforming to ASTM A 563, Grade C, D or DH may be used.

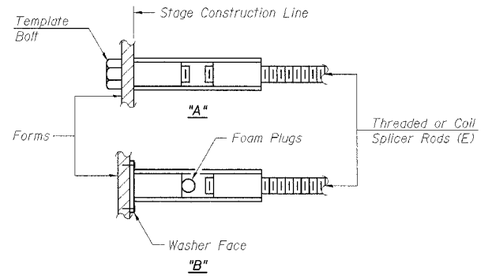

INSTALLATION AND SETTING METHODS

"A" : Set bar splicer assembly by means of a template bolt.
"B" : Set bar splicer assembly by nailing to wood forms or cementing to steel forms.
(E) : Indicates epoxy coating.

NOTES

Bar splicer assemblies shall be of an approved type and shall develop in tension at least 125 percent of the yield strength of the lapped reinforcement bars.

Splicer rods shall be of minimum 60 ksi yield strength, threaded or coiled full length.

All reinforcement bars shall be lapped and tied to the splicer rods or dowel bars.

Bar splicer assemblies shall be epoxy coated according to the requirements for reinforcement bars.

Other systems of similar design may be submitted to the Engineer for approval. Approval shall be based on certified test results from an approved testing laboratory that the proposed bar splicer assembly satisfies the following requirements:

① Minimum Capacity (Tension in kips) $= 1.25 \times fy \times A_t$

② Minimum *Pull-out Strength (Tension in kips) $= 1.25 \times fs_{allow} \times A_t$

Where fy = Yield strength of lapped reinforcement bars in ksi.
fs_{allow} = Allowable tensile stress in lapped reinforcement bars in ksi (Service Load)
A_t = Tensile stress area of lapped reinforcement bars.
* = 28 day concrete

BAR SPLICER ASSEMBLIES			
Bar Size to be Spliced	Splicer Rod or Dowel Bar Length	Strength Requirements	
		Min. Capacity kips - tension	Min. Pull-Out Strength kips - tension
#4	1'-8"	14.7	5.9
#5	2'-0"	23.0	9.2
#6	2'-7"	33.1	13.3
#7	3'-5"	45.1	18.0
#8	4'-6"	58.9	23.6
#9	5'-9"	75.0	30.0
#10	7'-3"	95.0	38.0
#11	9'-0"	117.4	46.8

Bar splicer assemblies shall be according to Section 508 of the Standard Specifications, except as noted. The furnishing and installation of bar splicer assemblies will be measured and paid for at the contract unit price each for "BAR SPLICERS."

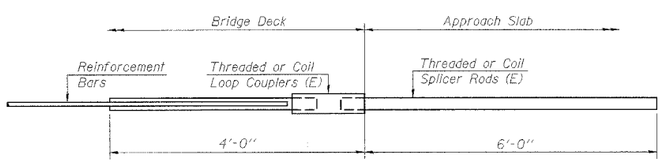

FOR INTEGRAL OR SEMI-INTEGRAL ABUTMENTS

Bar Splicer for #5 bar
Min. Capacity = 23.0 kips - tension
Min. Pull-out Strength = 9.2 kips - tension
No. Required =

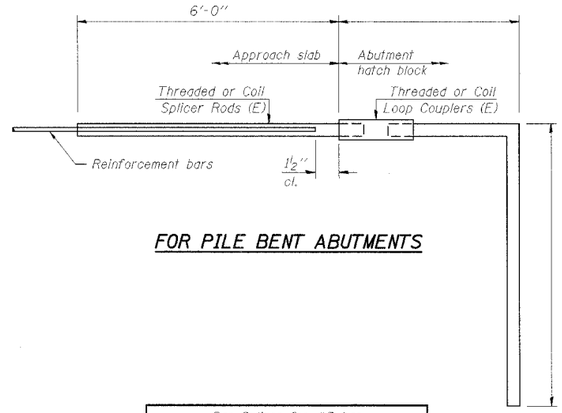

FOR PILE BENT ABUTMENTS

Bar Splicer for #5 bar
Min. Capacity = 23.0 kips - tension
Min. Pull-out Strength = 9.2 kips - tension
No. Required =

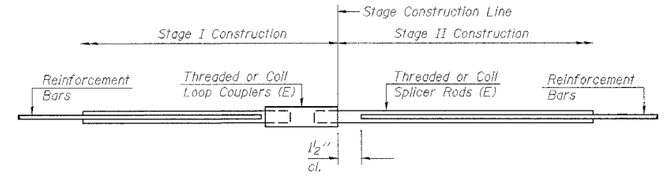

STANDARD

Bar Size	No. Assemblies Required	Location

SHT. S-38 OF 40

REVISIONS	
NAME	DATE

CITY OF DANVILLE, ILLINOIS
HUNGRY HOLLOW ROAD BRIDGE

BAR SPLICER DETAILS

SCALE:
DATE 12/06/05
DRAWN BY LAR
CHECKED BY JRH

TENG

TENG & ASSOCIATES, INC.
ENGINEERS/ARCHITECTS/PLANNERS
205 N. MICHIGAN AVE. CHICAGO, IL 60601
TELEPHONE (312)616-0000

R0SSPF
S:\DOCUMENT\02736902\STRUCT\DGN\BSD00PE01.DGN
\TTB00029.DGN
12-07-2005, 13:02:27

PAU RTE.	SECTION	COUNTY	TOTAL SHEETS	SHEET NO.
7000	02-00212-00-BR	VERMILION	59	54
FROM STA. 96+00.00		TO STA. 103+10.10		
FED. ROAD DIST. NO.	ILLINOIS	FED. AID PROJECT		

CONTRACT NO. 91265

BRIDGE FOUNDATION SOIL BORING LOG
midwest engineering services, inc.

Route: Hungry Hollow Road
Section: 00-00212-00-BR
County: Vermillion
Structure No. Existing 092-0106, New 092-6034
Station: Station 101 + 43
Offset: 6' Lt.

Boring: B-1
Page: 1 of 1
Date of Boring: March 29, 2004
Drilled By: Roger Burton
Checked By: Daniel E. Tappendorf, P. E.
MES Project No: 1-33012

Surface Water Elevation: 533.6 ft.
Ground Water Elevation:
when drilling: 527 ft.
at completion: Caved @ 537 ft.
Ground Surface Elevation: 552.3 ft.

Description	Depth (ft.)	Blows (6")	Q_u (tsf)	MC (%)
3" Asphalt over 12" concrete				
EL: 551.0 ft.				
Brown and dark brown sandy CLAY (SC)		1 1 2	-	18
EL: 547.8 ft.	5			
Brown fine clayey SAND (SC-SP)		1 2 1	-	19
		2 1 2	-	15
EL: 542.8 ft.	10			
Brown sandy CLAY (SC)		2 2 2	0.6 B	17
		2 3 2	1.0 B	18
	15	2 1 3	1.4 B	19
		2 3 3	1.0 P	17
EL: 532.8 ft.	20			
Brown silty CLAY (CL)		2 4 4	1.0 P	19
EL: 528.3 ft.			1.3	
Brown fine to coarse SAND (SW) Wet	25	1 2 3	-	18

Description	Depth (ft.)	Blows (6")	Q_u (tsf)	MC (%)
Brown fine to coarse SAND (SW) Wet				
EL: 523.8 ft.				
Gray silty SHALE	30	66/5"	4.5+ P	10
	35	32 60/3"	4.5+ P	13
	40	41 60/3"	4.5+ P	14
	45	60/4"	4.5+ P	12
EL: 507.0 ft.				
End of boring at 45' 4"	50			

N - Standard Penetration Test (SPT) = Sum of last two blow values in sample
MC- Moisture Content - Percent of dry weight
Qu- Unconfined Compressive Strength- tons per square foot (tsf)

Type Failure: Qu test — B-Bulge, S-Shear, P-Penetrometer

BRIDGE FOUNDATION SOIL BORING LOG
midwest engineering services, inc.

Route: Hungry Hollow Road
Section: 00-00212-00-BR
County: Vermillion
Structure No. Existing 092-0106, New 092-6034
Station: Station 101 + 06
Offset: 6' Rt.

Boring: B-2
Page: 1 of 1
Date of Boring: March 31, 2004
Drilled By: Roger Burton
Checked By: Daniel E. Tappendorf, P. E.
MES Project No: 1-33012

Surface Water Elevation: 533.6 ft.
Ground Water Elevation:
when drilling: 533.6 ft.
at completion: 533.6
Ground Surface Elevation: 553.6 ft.

Description	Depth (ft.)	Blows (6")	Q_u (tsf)	MC (%)
2" Asphalt over 8" concrete				
Open air below bridge deck	5			
	10			
	15			
	20			
EL: 533.6 ft.				
Water				
EL: 531.6 ft.				
Dark gray clayey SILT, trace gravel (ML)		2 2 1	0.6 B	23
	25	1 2 3	0.6 B	30

Description	Depth (ft.)	Blows (6")	Q_u (tsf)	MC (%)
EL: 526.1 ft.				
Gray silty SHALE		36 60/4"	4.5+ P	9
	30	60/4"	4.5+ P	6
		60/4"	4.5+ P	8
	35	60/2"	4.5+ P	9
	40	60/2"	4.5+ P	10
	45	60/2"	4.5+ P	3
EL: 508.5 ft.				
End of boring at 45' 2"	50			

N - Standard Penetration Test (SPT) = Sum of last two blow values in sample
MC- Moisture Content - Percent of dry weight
Qu- Unconfined Compressive Strength- tons per square foot (tsf)

Type Failure: Qu test — B-Bulge, S-Shear, P-Penetrometer

SHT. S-39 OF 40

REVISIONS	
NAME	DATE

CITY OF DANVILLE, ILLINOIS
HUNGRY HOLLOW ROAD BRIDGE

SOIL BORING LOG - I

SCALE:
DATE 12/06/05
DRAWN BY LAR
CHECKED BY JRH

TENG
TENG & ASSOCIATES, INC.
ENGINEERS/ARCHITECTS/PLANNERS
205 N. MICHIGAN AVE. CHICAGO, IL 60601
TELEPHONE: 312/616-0600

ROSSPF
S:\DOCUMENT\02336902\STRUCT\DGN\B01_00PE.DGN
-\TTR00028.DGN
12-07-2005, 13:02:26

FAU RTE	SECTION	COUNTY	TOTAL SHEETS	SHEET NO.
7000	02-00212-00-BR	VERMILION	59	55
FROM STA. 96+00.00		TO STA. 103+10.10		
FED. ROAD DIST. NO.	ILLINOIS	FED. AID PROJECT		

CONTRACT NO. 91285

BRIDGE FOUNDATION SOIL BORING LOG
midwest engineering services, inc.

Route: Hungry Hollow Road
Section: 00-00212-00-BR
County: Vermillion
Structure No. Existing 092-0106, New 092-6034
Station: Station 99 + 26
Offset: 6' Lt.

Boring: B-3
Page: 1 of 1
Date of Boring: March 31, 2004
Drilled By: Roger Burton
Checked By: Daniel E. Tappendorf, P. E.
MES Project No: 1-33012

Surface Water Elevation: 533.6 ft
Ground Water Elevation:
when drilling: 533.6 ft.
at completion: 533.6 ft.
Ground Surface Elevation: 554.6 ft.

Description	Depth (ft.)	Blows (6")	Q_u (tsf)	MC (%)
2" Asphalt over 8" concrete				
Gray clayey SILT (ML)		12 44 54	2.6 B	13
EL: 525.1 ft.	30			
Gray silty SHALE		28 60/4"	4.5+ P	7
	5			
		29 60/3"	4.5+ P	9
	35	60/4"	4.5+ P	8
	10			
	40	60/3"	4.5+ P	9
	15			
	45	60/2"	4.5+ P	7
	20			
EL: 509.5 ft.				
EL: 533.6 ft.				
Water				
EL: 532.6 ft.				
Gray clayey SILT (ML)		3 2 1	1.5 P	24
EL: 530.1 ft.	25			
Brown fine clayey SAND (SC-SP)		1 1 2	-	25
End of boring at 45' 2"	50			

N - Standard Penetration Test (SPT) = Sum of last two blow values in sample
MC- Moisture Content - Percent of dry weight
Qu- Unconfined Compressive Strength- tons per square foot (tsf)

Type Failure: Qu test, B-Bulge, S-Shear, P-Penetrometer

BRIDGE FOUNDATION SOIL BORING LOG
midwest engineering services, inc.

Route: Hungry Hollow Road
Section: 00-00212-00-BR
County: Vermillion
Structure No. Existing 092-0106, New 092-6034
Station: Station 98+88
Offset: 6' Lt.

Boring: B-4
Page: 1 of 1
Date of Boring: March 29, 2004
Drilled By: Roger Burton
Checked By: Daniel E. Tappendorf, P. E.
MES Project No: 1-33012

Surface Water Elevation: 533.6 ft.
Ground Water Elevation:
when drilling: Dry
at completion: Dry
Ground Surface Elevation: 555.6 ft.

Description	Depth (ft.)	Blows (6")	Q_u (tsf)	MC (%)
3" Asphalt over 12" concrete				
EL: 554.1 ft.				
Brown fine to medium SAND (SP)		3 3 2	-	10
	5	3 2 4	-	17
		4 4 4	-	8
EL: 546.1 ft.	10			
Brown fine to medium clayey SAND (SP)		4 2 2	-	17
	15	6 5 5	-	10
EL: 538.6 ft.				
Dark gray silty CLAY (CL)		2 3 4	-	17
	20	3 3 3	2.2 B	23
		2 3 2	1.5 B	20
EL: 531.1 ft.	25			
Gray clayey SILT (ML)		3 3 3	1.9 B	19
Gray clayey SILT (ML)				
EL: 527.6 ft.				
Gray silty SHALE	30	39 60/5"	4.5+ P	9
	35	60/5"	4.5+ P	7
	40	60/4"	4.5+ P	9
	45	59 60/3'	4.5+ P	9
EL: 509.9 ft.				
End of boring at 45' 9"	50			

N - Standard Penetration Test (SPT) = Sum of last two blow values in sample
MC- Moisture Content - Percent of dry weight
Qu- Unconfined Compressive Strength- tons per square foot (tsf)

Type Failure: Qu test, B-Bulge, S-Shear, P-Penetrometer

SHT. S-40 OF 40

REVISIONS	
NAME	DATE

CITY OF DANVILLE, ILLINOIS
HUNGRY HOLLOW ROAD BRIDGE

SOIL BORING LOG - II

SCALE:
DATE 12/06/05
DRAWN BY LAR
CHECKED BY JRH

TENG
TENG & ASSOCIATES, INC.
ENGINEERS AND SCIENTISTS OF CHICAGO
215 N. MICHIGAN AVE. CHICAGO, IL 60601
TELEPHONE: (312) 616-0300

ROSSPF
S:\DOCUMENT\02336902\STRUCT\DGN\BOLOPEY.DGN
-\TTB00220.DGN
12-07-2005, 08:26

$$$$ref_list_name$$$$

REVISIONS	
NAME	DATE

12-07-2005, 13:21:24 S:\DOCUMENT\02336902\CIVIL\DGN\XSC00PPA.DGN ROSSPF

TENG

TENG & ASSOCIATES, INC.
CONSULTING ENGINEERS
1905 SOUTH MAIN STREET
TEL: (815) 933-1000 FAX: (815) 933-1001

CITY OF DANVILLE, ILLINOIS
HUNGRY HOLLOW ROAD BRIDGE

ROADWAY CROSS SECTIONS

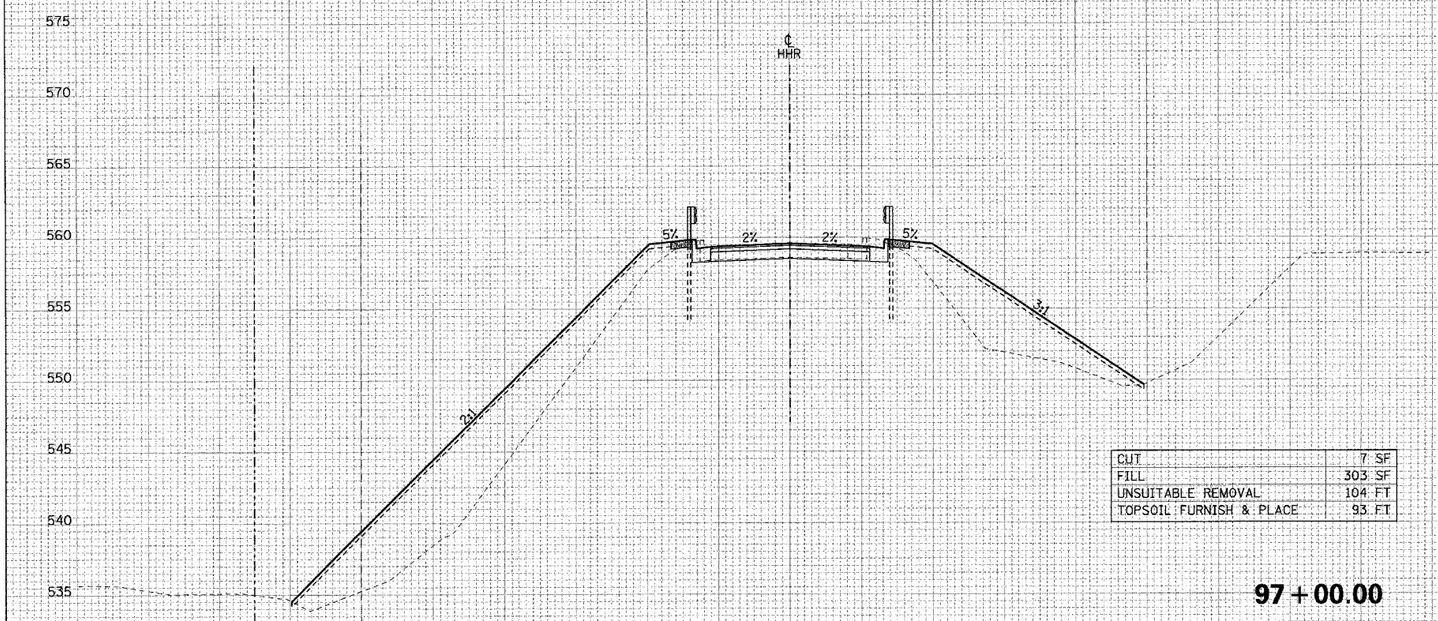

CUT	7 SF
FILL	303 SF
UNSUITABLE REMOVAL	104 FT
TOPSOIL FURNISH & PLACE	93 FT

97+00.00

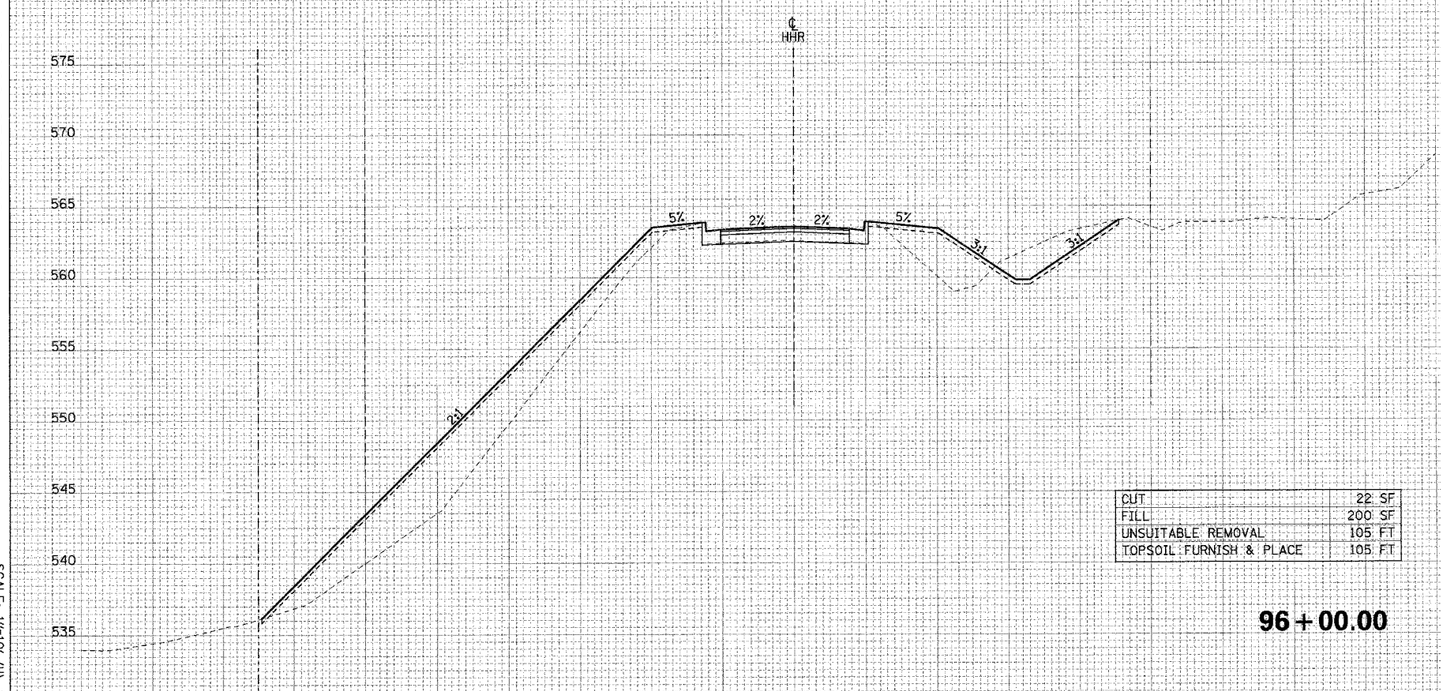

CUT	22 SF
FILL	200 SF
UNSUITABLE REMOVAL	105 FT
TOPSOIL FURNISH & PLACE	105 FT

96+00.00

90 80 70 60 50 40 30 20 10 0 10 20 30 40 50 60 70 80

SCALE: 1"=10' (H), 1"=5' (V)
DATE: 12/06/05

DRAWN BY PER
CHECKED BY JRH

FAU RTE.	SECTION	COUNTY	TOTAL SHEETS	SHEET NO.
7000	(2-00212-00-BR) FROM STA. 96+00.00 TO STA. 103+03.18	VERMILLION	59	56

FED. ROAD DIST. NO. ILLINOIS FED. AID PROJECT

CONTRACT NO. 91245

REVISIONS	
NAME	DATE

FAU RTE	SECTION	COUNTY	TOTAL SHEETS	SHEET NO.
7000	02-00212-00-BR	VERMILION	59	57
FROM STA. 96+00.00		TO STA. 103+03.18		
FED. ROAD DIST. NO.	ILLINOIS	FED. AID PROJECT		

CONTRACT NO. 91265

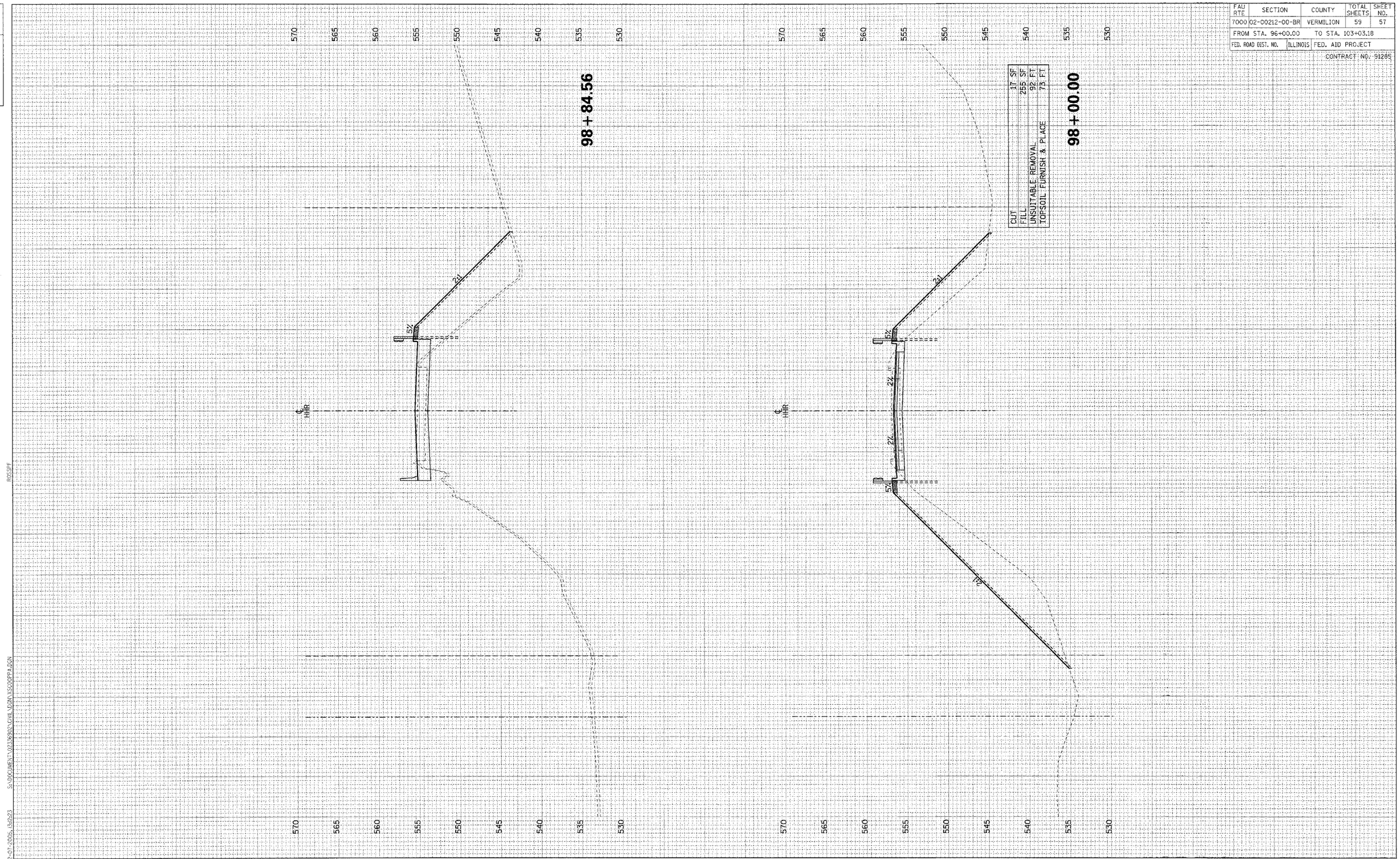

CUT	17 SF
FILL	255 SF
UNSUITABLE REMOVAL	92 FT
TOPSOIL FURNISH & PLACE	73 FT

R05SPF

S:\DOCUMENT\02336902\CIVIL\DGN\XSC00PPA.DGN

12-07-2005,A3P223

$$$$r_of_list_name$$$$

TENG

TENG & ASSOCIATES, INC.
ENGINEERS/ARCHITECTS/PLANNERS
800 N. MICHIGAN AVE. CHICAGO, IL 60601
TELEPHONE: 312-616-0600

CITY OF DANVILLE, ILLINOIS
HUNGRY HOLLOW ROAD BRIDGE

ROADWAY CROSS SECTIONS

SCALE: 1"=10' (H), 1"=5' (V)
DATE: 12/06/05

DRAWN BY PFR
CHECKED BY JRH

REVISIONS	
NAME	DATE

FAU RTE	SECTION	COUNTY	TOTAL SHEETS	SHEET NO.
7000	02-00212-00-BR	VERMILION	59	58
FROM STA. 96+00.00		TO STA. 103+03.18		
FED. ROAD DIST. NO.	ILLINOIS	FED. AID PROJECT		

CONTRACT NO. 91285

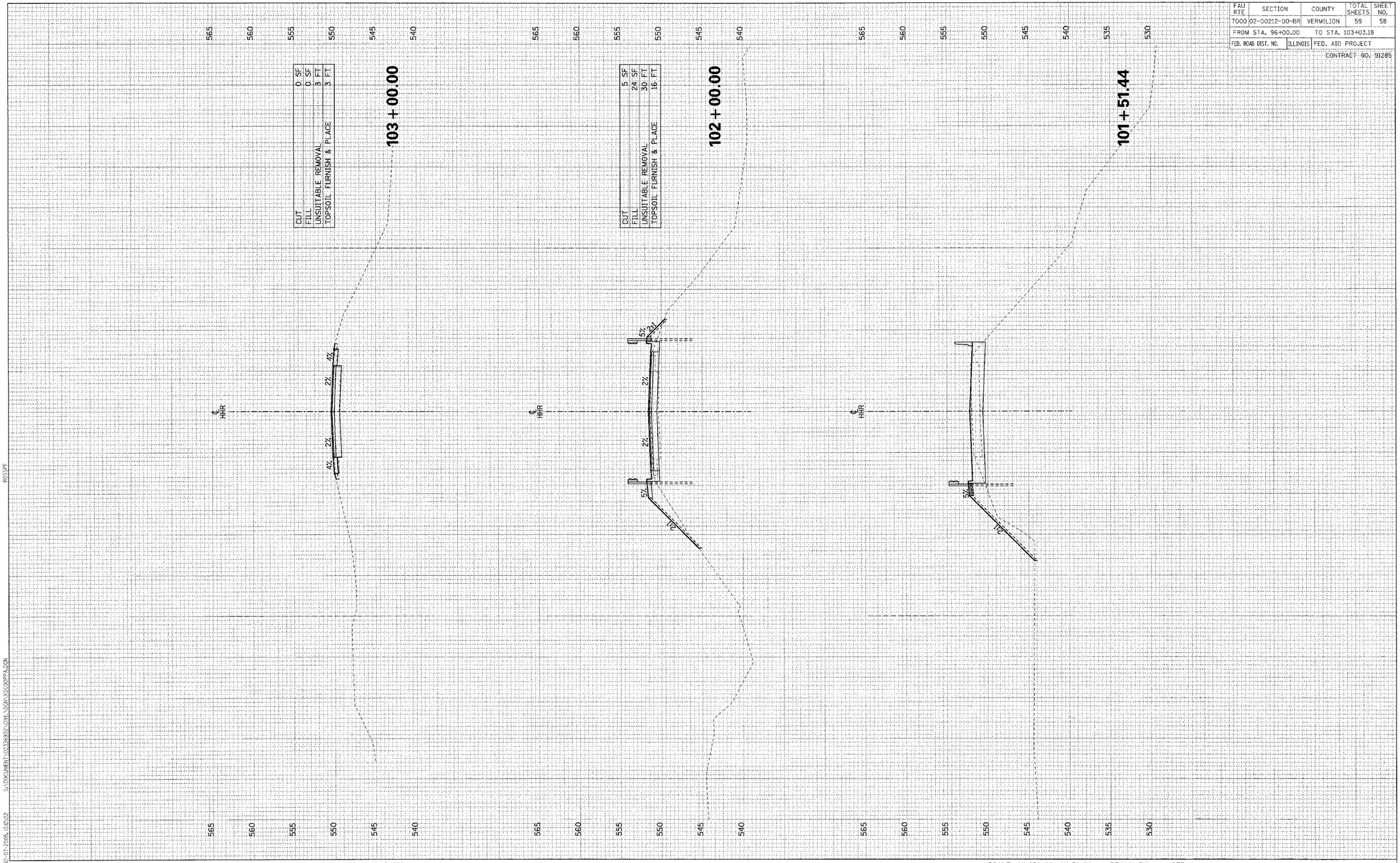

12-07-2005, 13:22:22 S:\DOCUMENT\02338302\CIVIL\DGN\XSCOOPPA.DGN ROSSPF

$$$$refl_list_name$$$$

TENG

TENG & ASSOCIATES, INC.
ENGINEERS/ARCHITECTS/PLANNERS
205 N. MICHIGAN AVE. CHICAGO, IL 60601
TELEPHONE: 312/616-0300

CITY OF DANVILLE, ILLINOIS
HUNGRY HOLLOW ROAD BRIDGE

ROADWAY CROSS SECTIONS

SCALE: 1"=10' (H), 1"=5' (V)
DATE: 12/06/05

DRAWN BY PFR
CHECKED BY JRH

FAU RTE	SECTION	COUNTY	TOTAL SHEETS	SHEET NO.
7000	02-00212-00-BR	VERMILION	59	59
FROM STA. 96+00.00		TO STA. 103+03.18		
FED. ROAD DIST. NO.	ILLINOIS	FED. AID PROJECT		

CONTRACT NO. 91285

REVISIONS	
NAME	DATE

R05SPF

S:\DOCUMENT\02336902\DWG\DGN\XSCOPPA.DGN

12-07-2005, 08:21

$$$$rof_list.nomesses

TENG

TENG & ASSOCIATES, INC.
ENGINEERS/ARCHITECTS/PLANNERS
900 N. MICHIGAN AVE. CHICAGO, IL 60611
TELEPHONE: 312-616-1000

CITY OF DANVILLE, ILLINOIS
HUNGRY HOLLOW ROAD BRIDGE

ROADWAY CROSS SECTIONS

SCALE: 1"=10' (H), 1"=5' (V)
DATE: 12/06/05

DRAWN BY PFR
CHECKED BY JRH