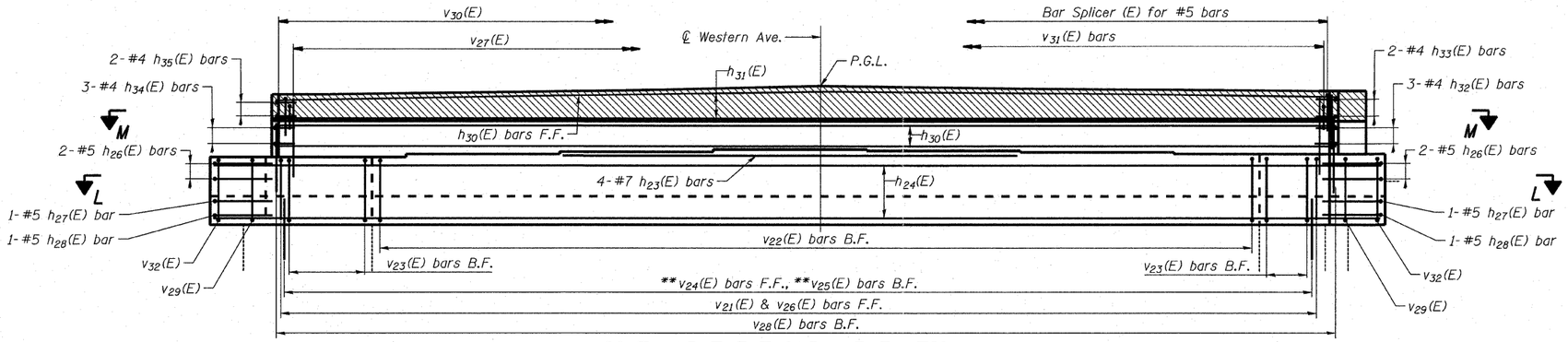

SOUTH ABUTMENT CAP - ELEVATION

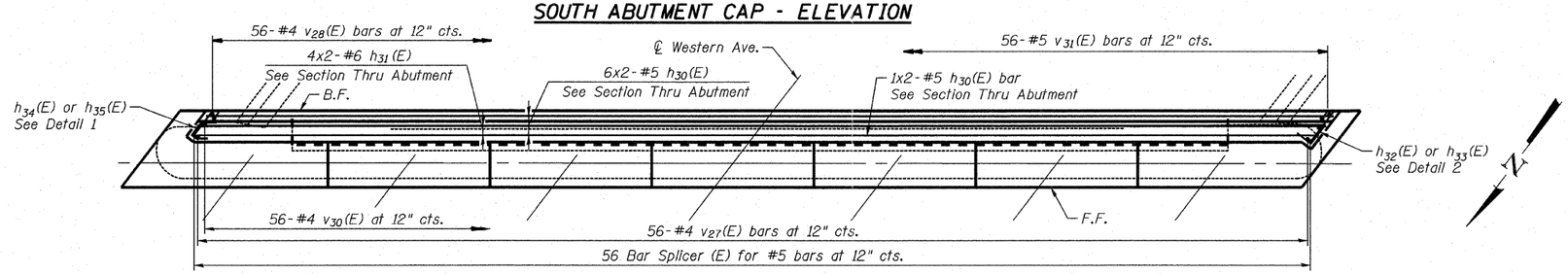

SECTION M-M

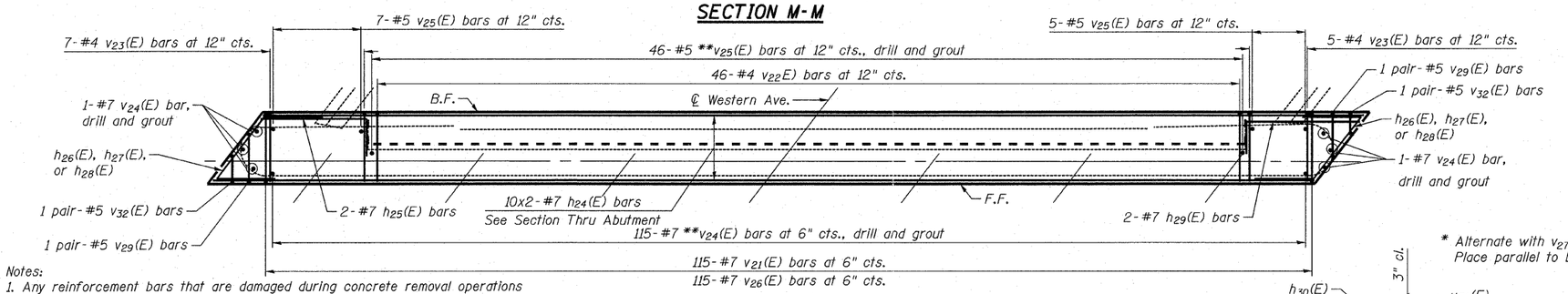

SECTION L-L

Notes:
1. Any reinforcement bars that are damaged during concrete removal operations shall be repaired or replaced using approved bar splicer or anchorage system. Cost included with "Concrete Removal".
2. For bar shapes, see Sheet S21 of S34.
3. Hatched area to be poured after superstructure false work has been removed. Quantity of concrete included with "Concrete Superstructures".
4. For Expansion Joint details, see Sheet S10 of S34.

SOUTH ABUTMENT BILL OF MATERIAL

Bar	No.	Size	Length	Shape
h_{23}(E)	4	# 7	23'-0"	
h_{24}(E)	20	# 7	31'-1"	
h_{25}(E)	2	# 7	7'-0"	
h_{26}(E)	4	# 5	10'-3"	
h_{27}(E)	2	# 5	9'-10"	
h_{28}(E)	2	# 5	8'-4"	
h_{29}(E)	2	# 7	8'-0"	
h_{30}(E)	14	# 5	28'-10"	
h_{31}(E)	8	# 6	29'-3"	
h_{32}(E)	3	# 4	4'-11"	
h_{33}(E)	2	# 4	4'-0"	
h_{34}(E)	3	# 4	5'-0"	
h_{35}(E)	2	# 4	4'-2"	
v_{21}(E)	115	# 7	6'-11"	
v_{22}(E)	46	# 4	4'-10"	
v_{23}(E)	12	# 4	5'-3"	
v_{24}(E)	121	# 7	5'-6"	
v_{25}(E)	58	# 5	3'-6"	
v_{26}(E)	115	# 7	4'-4"	
v_{27}(E)	56	# 4	4'-9"	
v_{28}(E)	56	# 4	3'-0"	
v_{29}(E)	4	# 5	6'-11"	
v_{30}(E)	56	# 4	3'-0"	
v_{31}(E)	56	# 5	3'-9"	
v_{32}(E)	4	# 5	4'-7"	
Reinforcement Bars, Epoxy Coated			Pound	8,010
Concrete Structures			Cu. Yds.	31.9
Concrete Sealer			Sq. Ft.	614
Structure Excavation			Cu. Yds.	44

** Epoxy Grout v_{24}(E) and v_{25}(E) bars in 9" min. drilled holes according to Art. 584 of the Standard Specifications.

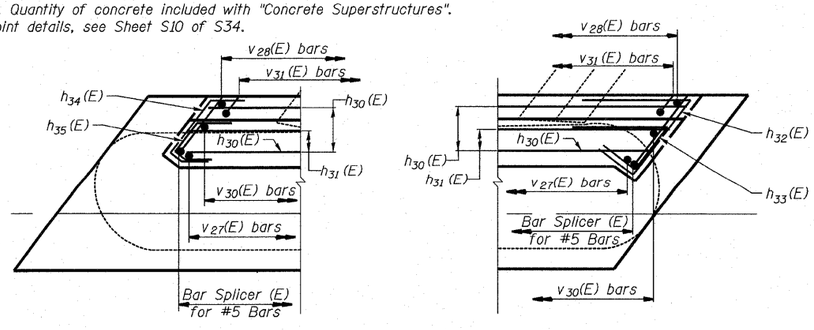

DETAIL 1

DETAIL 2

MINIMUM BAR LAPS

(Abutments)
#5 bar = 3'-8"
#6 bar = 4'-5"
#7 bar = 5'-10"

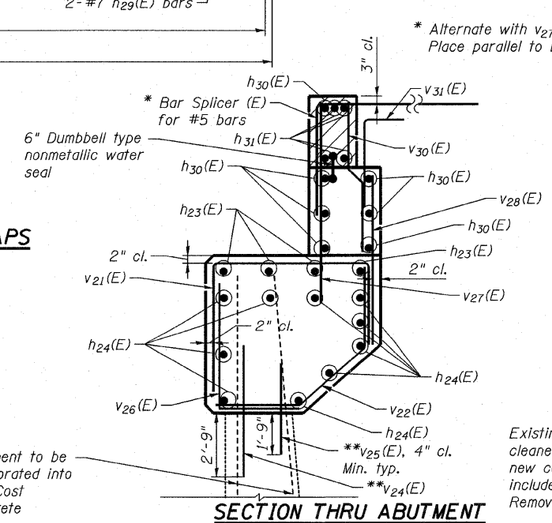

SECTION THRU ABUTMENT

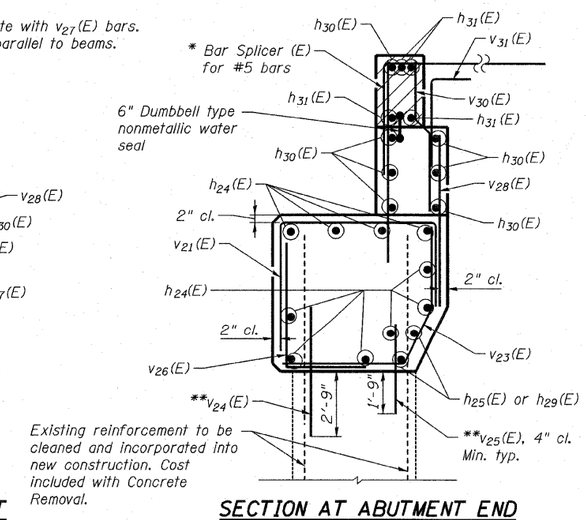

SECTION AT ABUTMENT END

APEX CONSULTING ENGINEERS, LLC 111 E. Wacker Drive, Suite 830 Chicago, IL 60601 Phone (312) 977-0660 Fax (312) 977-0661	USER NAME =	DESIGNED - HAA	REVISED
		CHECKED - RAD	REVISED
	PLOT SCALE =	DRAWN - HAA	REVISED
	PLOT DATE = 12/9/2011	CHECKED - RAD	REVISED

STATE OF ILLINOIS
DEPARTMENT OF TRANSPORTATION

SOUTH ABUTMENT DETAILS
STRUCTURE NO. 016-0772
SHEET NO. S19 OF S34 SHEETS

F.A.U. RTE.	SECTION	COUNTY	TOTAL SHEETS	SHEET NO.
2845	0505-B	COOK	52	29
		CONTRACT NO. 60M78		
		ILLINOIS FED. AID PROJECT		