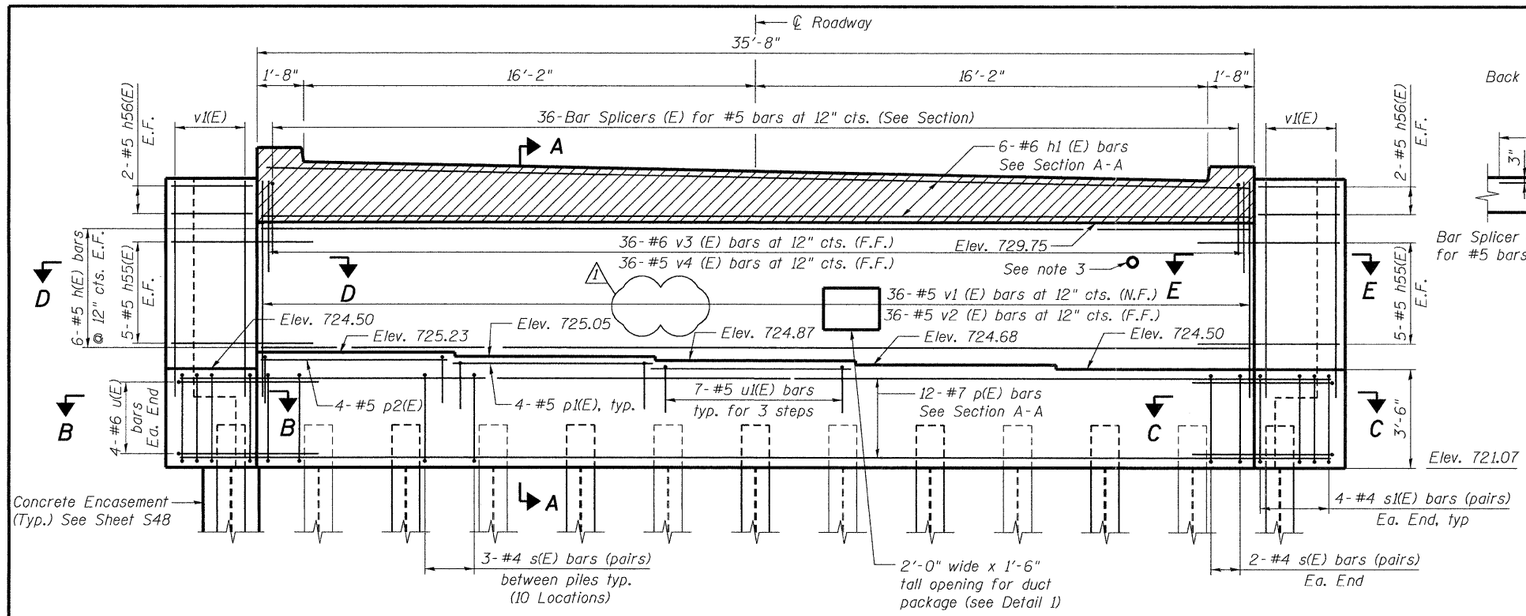

ELEVATION - WEST ABUTMENT

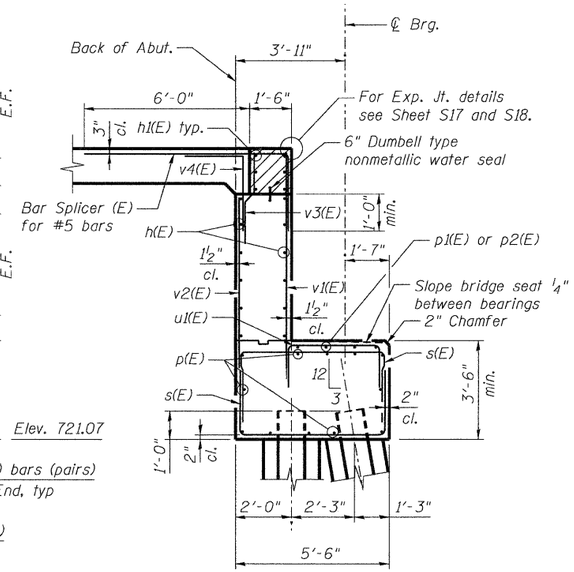

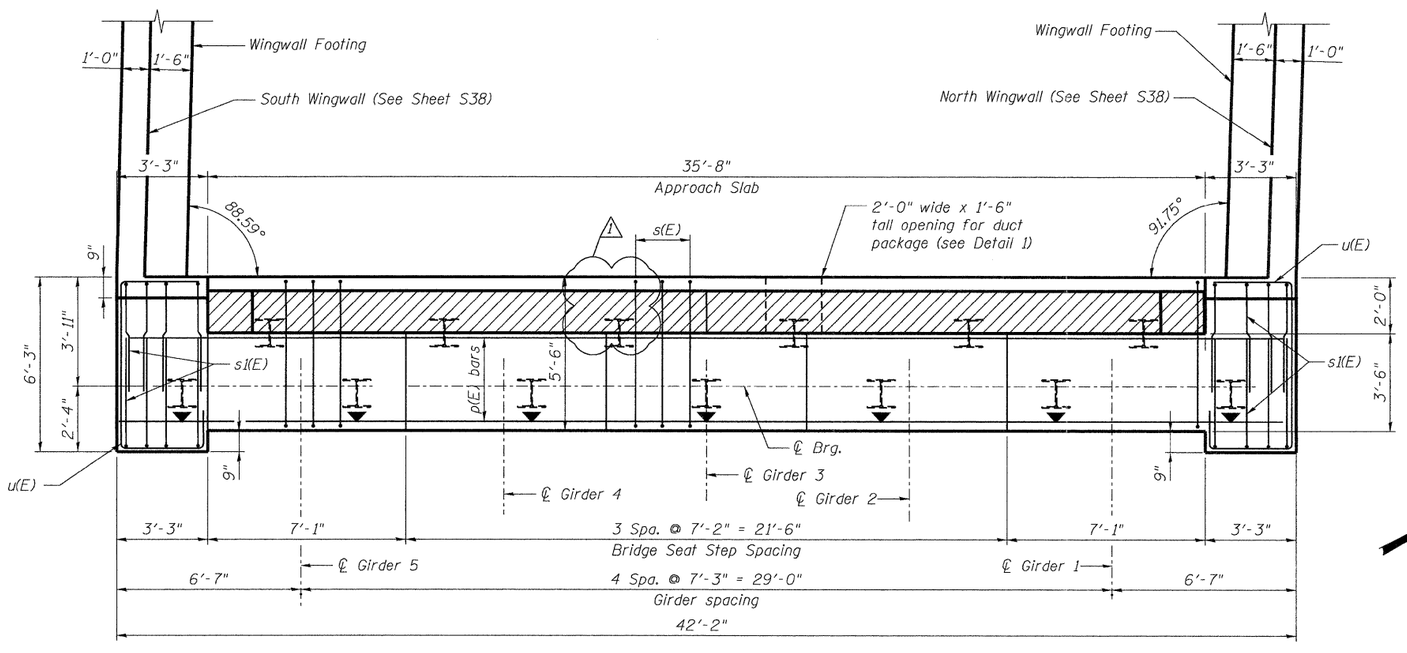

PLAN - WEST ABUTMENT

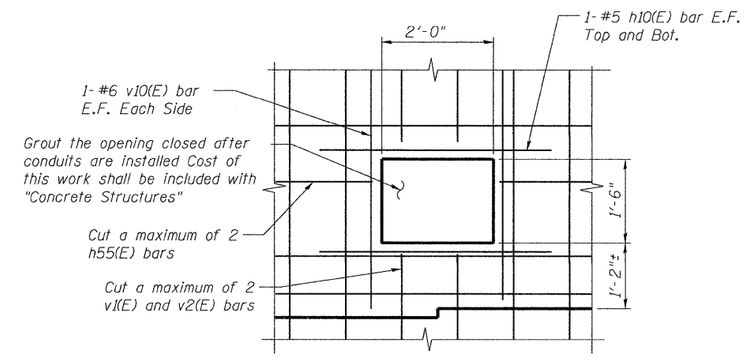

DETAIL 1 AT DUCT BANK BLOCKOUT

Note: Exact location of blockout shall be confirmed with the electrical details prior to construction of backwall

PILE DATA

Type: HP12x53 with pile shoes
Nominal Required Bearing: 280 kips
Factored Resistance Available: 154 kips
Est. Length: 62 feet
No. Production Piles: 14
No. Test Piles: 1

NOTES:

1. See sheet S38 for wingwall sections and details.
2. See sheet S3 for foundation layout.
3. Locate 3" sleeve as required for traffic signal interconnect.

benesch engineers · scientists · planners
Alfred Benesch & Company
205 North Michigan Avenue, Suite 2400
Chicago, Illinois 60601
312-565-0450 Job No. 10092

FILE NAME = 0456024.037_WAbutDtls1.dgn	USER NAME = akeaschall	DESIGNED - MFH	REVISED - ⚠ ADDENDUM 1/6/2012	CITY OF ST. CHARLES	WEST ABUTMENT DETAILS (1 OF 2) STRUCTURE NO. 045-6024 RED GATE ROAD OVER THE FOX RIVER	F.A.I. RTE.	SECTION	COUNTY	TOTAL SHEETS / SHEET NO.
		CHECKED - MRB	REVISED -				04-00092-00-BR	KANE	440 / 259
	PLOT SCALE =	DRAWN - RMG	REVISED -		SHEET NO. S37 OF S56 SHEETS			CONTRACT NO. 63650	
	PLOT DATE = 1/5/2012	CHECKED - MRB	REVISED -				ILLINOIS FED. AID PROJECT		

x:\10000s\10092\engineering_documents_redgatephase1\rgroverfoxriver\final\plans\0456024_037_WAbutDtls1.dgn 10:13:49 AM 1/5/2012