(17) EXISTING TYPICAL CROSS SECTION

STA. 43+00.00 TO STA. 46+00.00

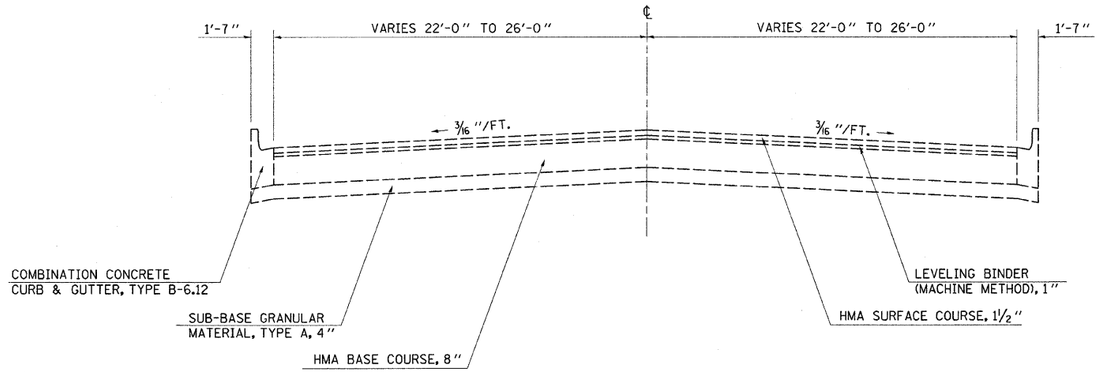

NOT DRAWN TO SCALE

(18) EXISTING TYPICAL CROSS SECTION

STA. 46+00.00 TO STA. 47+32.00

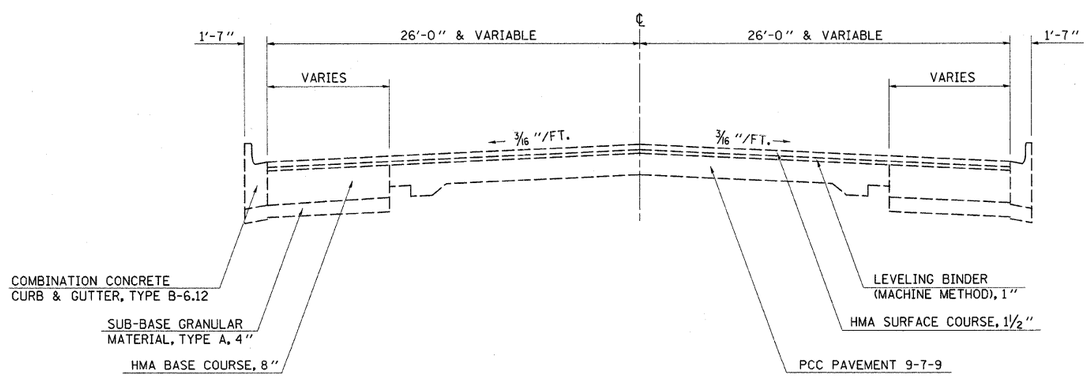

NOT DRAWN TO SCALE

FILE NAME = c:\pw_work\pwidot\swartzrw\d0212489\d774500-sht-typicals.dgn	USER NAME = swartzrw	DESIGNED -	REVISED -	STATE OF ILLINOIS DEPARTMENT OF TRANSPORTATION	EXISTING TYPICAL CROSS SECTION	F.A.P. RTE.	SECTION	COUNTY	TOTAL SHEETS	SHEET NO.
	PLOT SCALE = 20.0000 ' / in.	CHECKED -	REVISED -			716	(127R,RS-2)(130R-2,RS-1)	MACON	98	14
	PLOT DATE = 10/13/2011	DATE -	REVISED -		SCALE: NA / SHEET NO. 9 OF 11 SHEETS / STA. TO STA.			CONTRACT NO. 74500		
								ILLINOIS FED. AID PROJECT		