Notes:
See sheet S-27 of S-51 for Sections C-C & D-D and View E-E.
a10(E) and a11(E) bar spacings measured along ℄ Rdwy.

* Tilt #9 b11(E) bars as required to maintain clearance.

*** Cost included with Concrete Superstructure.

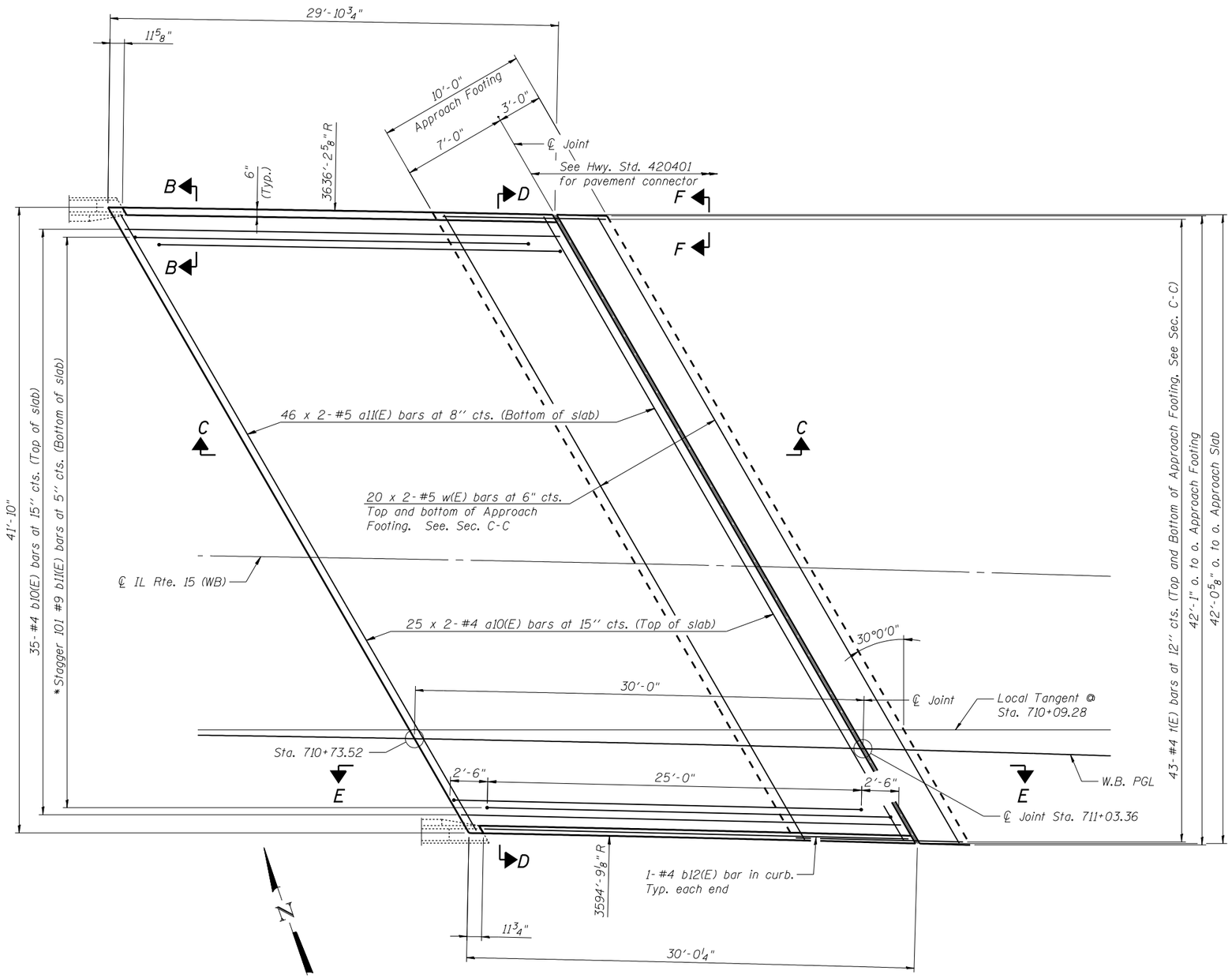

EAST WESTBOUND APPROACH SLAB PLAN

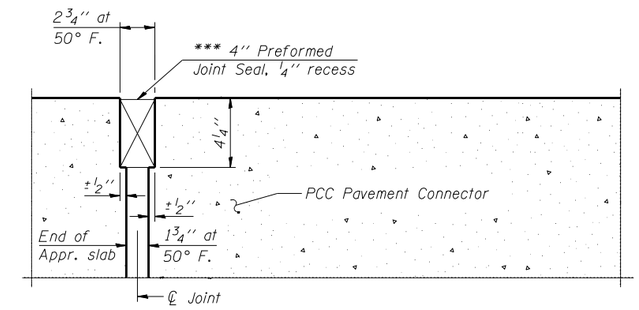

DETAIL A

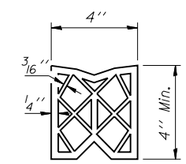

PREFORMED
JOINT SEAL

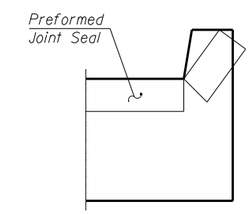

VIEW F-F

Angle Preformed Joint Seal at 45°
at curbs when req'd for drainage.

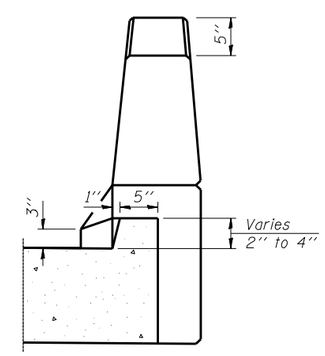

VIEW B-B

MINIMUM BAR LAP

#4 Bars = 1'-10"
#5 Bars = 2'-7"

FILE NAME = 082D119-0120-76884-025-EastApp-PlanWB.dgn

STV	USER NAME = brazzaro	DESIGNED - MJK	REVISED - ·
		CHECKED - BTO	REVISED - ·
	PLOT SCALE = 8:0 ':' / IN.	DRAWN - MJK	REVISED - ·
	PLOT DATE = 10/19/2011	CHECKED - BTO	REVISED - ·

STATE OF ILLINOIS
DEPARTMENT OF TRANSPORTATION

EAST W.B. BRIDGE APPROACH SLAB PLAN
STRUCTURE NO. 082-0119 (E.B.) & 082-0120 (W.B.)
SHEET NO. S-25 OF S-51 SHEETS

F.A.P RTE.	SECTION	COUNTY	TOTAL SHEETS	SHEET NO.
103	27-1-VHB-1	ST. CLAIR	277	202
		CONTRACT NO. 76884		
	ILLINOIS	FED. AID PROJECT		