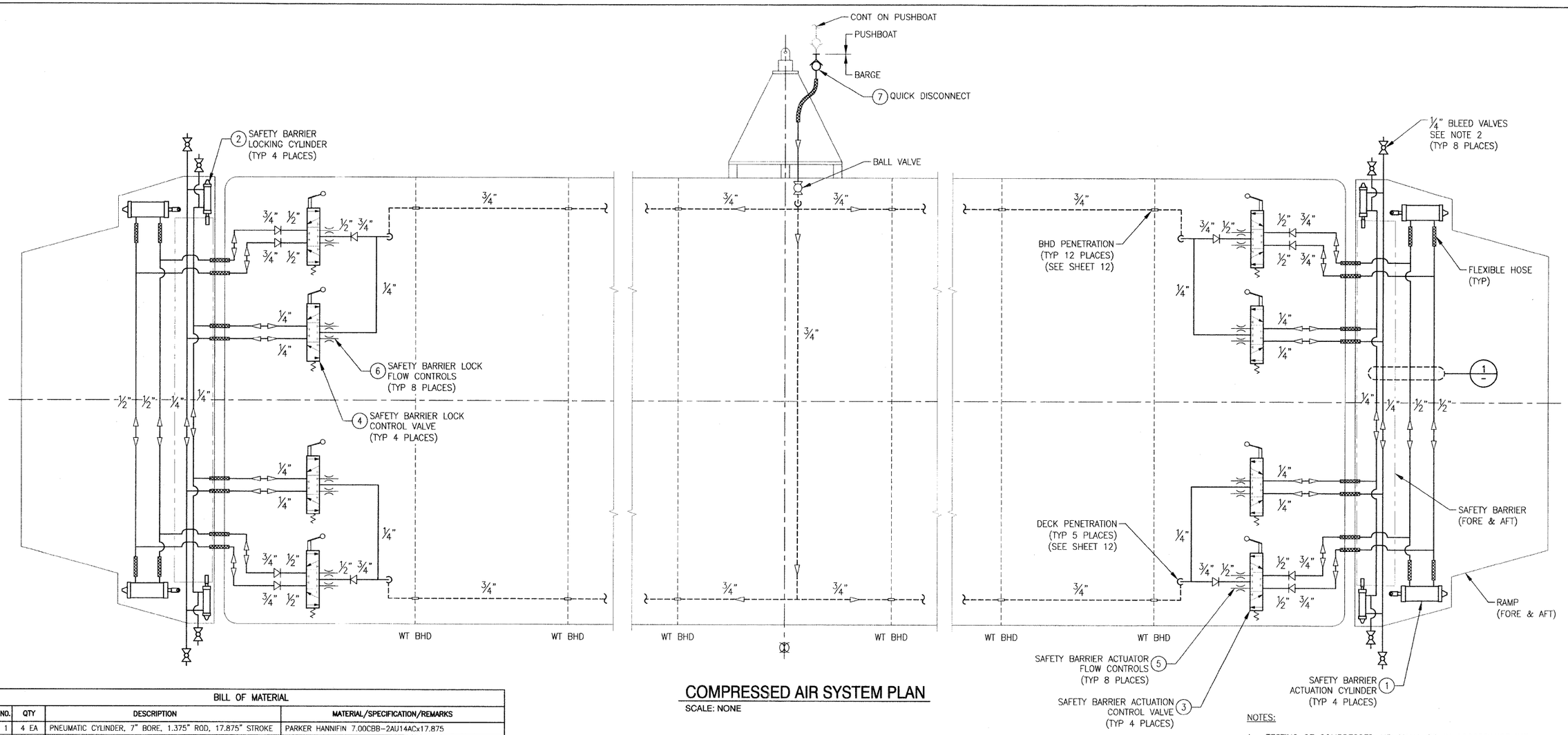

COMPRESSED AIR SYSTEM PLAN

SCALE: NONE

BILL OF MATERIAL			
PC NO.	QTY	DESCRIPTION	MATERIAL/SPECIFICATION/REMARKS
1	4 EA	PNEUMATIC CYLINDER, 7" BORE, 1.375" ROD, 17.875" STROKE	PARKER HANNIFIN 7.00CBB-2AU14ACx17.875
2	4 EA	PNEUMATIC CYLINDER, 1" BORE, 0.5" ROD, 3" STROKE	PARKER HANNIFIN 1.00C-2AU14x1.75
3	4 EA	DIRECTIONAL CONTROL VALVE, ½"	BOSCH REXROTH TYPE "D" PILOTAIR P04-42-0354
4	4 EA	DIRECTIONAL CONTROL VALVE, ¼"	BOSCH REXROTH TYPE "D" PILOTAIR P02-42-0354
5	8 EA	MUFFLER/FLOW CONTROLS, ½"	PARKER HANNIFIN 04508 0080
6	8 EA	MUFFLER/FLOW CONTROLS, ¼"	PARKER HANNIFIN 04504 0004
7	1 EA	QUICK DISCONNECT, ¾", MALE	COML
8	AS REQ	FLAT BAR, ¼"x1", FOR PIPE HANGERS	ASTM A36

MATERIAL SCHEDULE							
SERVICE	SIZE	PIPE	TAKEDOWN JOINTS	FITTINGS	VALVES		FLEXIBLE CONNECTIONS
					BODY	TRIM	
PNEUMATIC PIPING 140 PSIG	ALL	PIPE: SCHED 40, SEAMLESS CARBON STEEL ASTM A-106 GRADE B ASNI B36.10	UNIONS: SOCKET WELD OR THREADED CARBON STEEL ASTM A 105/A 105M MSS-SP-83 FLANGES: SOCKET WELD OR SLIP-ON CARBON STEEL ASTM A 105/A 105M ANSI B16.5	SOCKET WELD: STEEL ASTM A 234/A 234M OR WPB OR A 105/A 105M ASNI B16.11	BALL: BRONZE FLANGED ASME SB61 OR SB62 MSS-SP-72	CRES	HOSE: SAE J-1942 REINFORCED HOSE FITTINGS: SAE J-1475

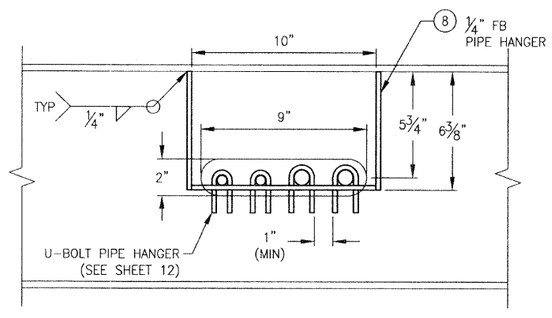

1 RAMP PENETRATION DETAIL

SCALE: 3" = 1'-0"

NOTES:

1. TESTING OF COMPRESSED AIR SHALL BE IN ACCORDANCE WITH 46 CFR 58.30-35 AND AS FOLLOWS. ALL COMPRESSED AIR PIPING ASSEMBLIES AND ASSOCIATED EQUIPMENT SHALL BE TESTED AT 1.5 TIMES THE MAXIMUM WORKING PRESSURE OF 140 PSIG. THE REQUIRED TEST PRESSURE (210 PSIG) SHALL BE MAINTAINED FOR A SUFFICIENT AMOUNT OF TIME TO CHECK ALL COMPONENTS FOR STRENGTH AND POROSITY AND TO PERMIT AN INSPECTION TO BE MADE OF ALL CONNECTIONS.
2. INSTALL BLEED VALVES FOR SAFETY BARRIER LOCKING CYLINDERS AS CLOSE AS PRACTICABLE TO THE CYLINDERS PORT.

PROFESSIONAL ENGINEER — ORIGINAL REV – APPROVED BY MARTY E. McKAY DATED 10/04/2011

MARTY EDWARD McKAY — STATE OF WASHINGTON — 46505 — REGISTERED PROFESSIONAL ENGINEER — 22 JUL 2011

0 2" 4" 8" 12"
SCALE: 3" = 1'-0"

ART ANDERSON ASSOCIATES
202 PACIFIC AVE, BREMERTON, WA 98337
(360) 479-5600

DRAWING NO. CEIDT001BA-551-201

FILE NAME =	USER NAME =	DESIGNED — M. McKAY	REVISED — REV A 07/21/2011	STATE OF ILLINOIS DEPARTMENT OF TRANSPORTATION
		DRAWN — J. WALKER	REVISED —	
	PLOT SCALE =	CHECKED — P. MARTIN	REVISED —	
	PLOT DATE =	DATE — 10/04/2010	REVISED —	

IDOT BRUSSELS FERRY
COMPRESSED AIR SYSTEM PIPING

SCALE: 3" = 1'-0" | SHEET NO. OF SHEETS | STA. TO STA.

F.A.P. RTE.	SECTION	COUNTY	TOTAL SHEETS	SHEET NO.
304	21-3	JERSEY	26	14

CONTRACT NO. 76D29

FED. ROAD DIST. NO. | ILLINOIS | FED. AID PROJECT