F.A.I. RTE.	SECTION	COUNTY	TOTAL SHEETS	SHEET NO.
90/94	2003-0311	COOK	976	352
STA.		TO STA.		
FED. ROAD DIST. NO. 1	ILLINOIS	FED. AID PROJECT		

62583

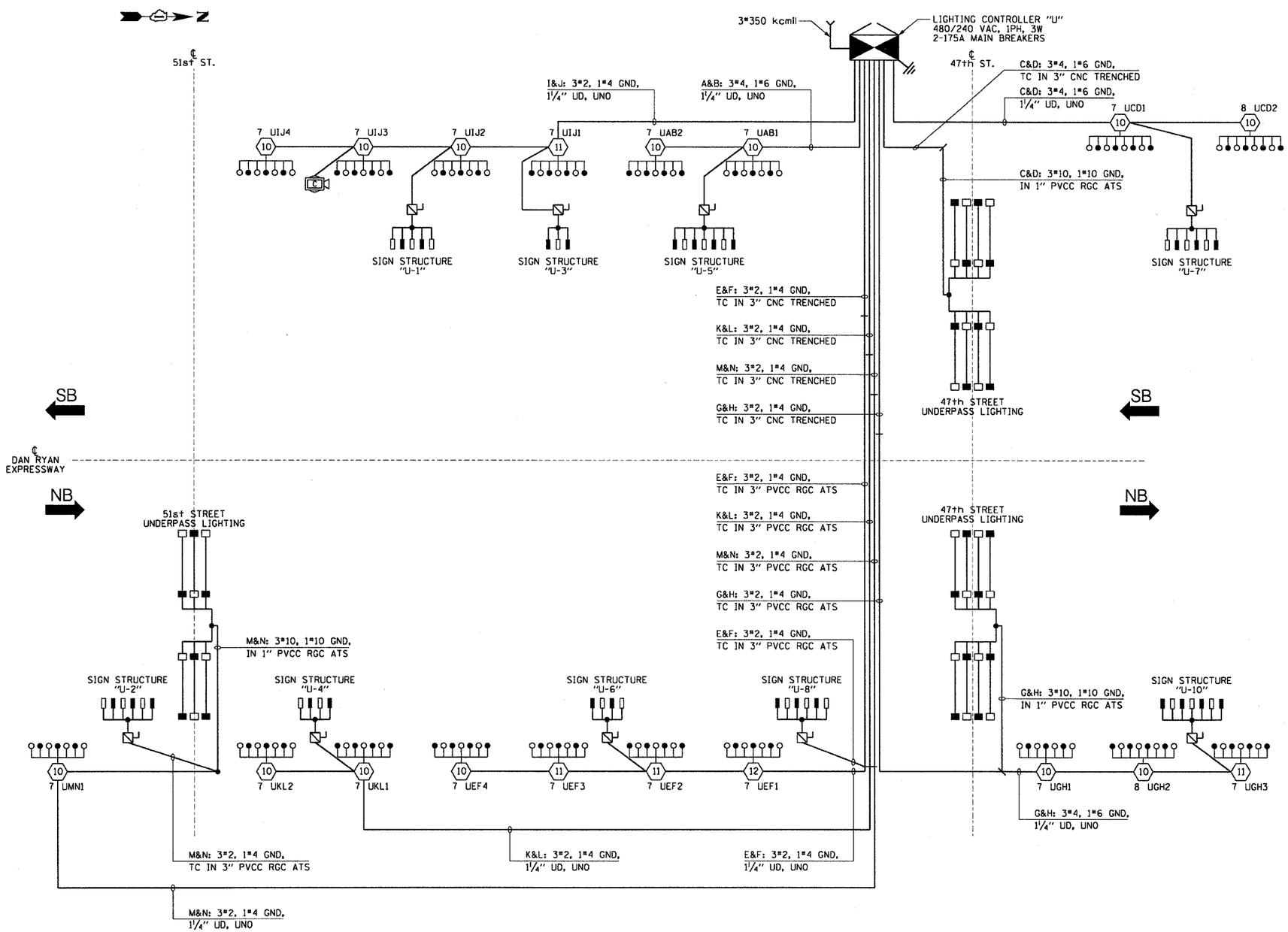

LEGEND

- HIGH MAST LIGHT TOWER. 400 W. HPS LUMINAIRE (BLACK PHASE-SOLID SYMBOL, RED PHASE-OPEN SYMBOL)
- 7 UAB1 — HIGH MAST TOWER DESIGNATION.
- LIGHTED SIGN STRUCTURE WITH 170 W. FLUORESCENT LUMINAIRES, QUANTITY OF LUMINAIRES AS REQUIRED. (BLACK PHASE-SOLID SYMBOL, RED PHASE, OPEN SYMBOL)
- 3 POLE SAFETY SWITCH
- UNDERPASS LIGHTING UNIT, 70 WATT HPS LUMINAIRE. (BLACK PHASE- SOLID SYMBOL, RED PHASE-OPEN SYMBOL)
- LIGHTING CONTROLLER
- GROUND FIELD
- ELECTRIC UTILITY SERVICE
- CLOSED CIRCUIT TELEVISION CAMERA

LOAD TABLE
LIGHTING CONTROLLER "U"

CIRCUIT	RED PHASE AMPS	RED PHASE WATTS	CIRCUIT	BLACK PHASE AMPS	BLACK PHASE WATTS
A	16.1	3,864	B	17.0	4,080
C	19.2	4,608	D	21.1	5,064
E	31.3	7,512	F	31.3	7,512
G	26.9	6,456	H	27.7	6,648
I	30.5	7,320	J	30.5	7,320
K	15.3	3,672	L	15.3	3,672
M	12.6	3,024	N	10.7	2,568
O			P		
TOTAL	151.9	36,456	TOTAL	153.6	36,864

SL08-10

SINGLE LINE DIAGRAM
LIGHTING CONTROLLER "U"
NOT TO SCALE

REVISIONS	
NAME	DATE

ILLINOIS DEPARTMENT OF TRANSPORTATION
F.A.I. 90/94 (DAN RYAN EXPRESSWAY)
31st STREET TO I-57

SINGLE LINE DIAGRAM
LIGHTING CONTROLLER "U"
PROPOSED IMPROVEMENTS

SCALE: NOT TO SCALE — DRAWN BY: CJM
DATE: October 29, 2004 — CHECKED BY: WDS

CTE ENGINEERS
CONSOER TOWNSEND ENVIRODYNE ENGINEERS, INC.
303 EAST WACKER DRIVE, SUITE 600
CHICAGO ILLINOIS 60601-5212. PHONE: (312) 938-0300

mcp04046 select N6 cntr 2D\SM\contract 2\2008 final\sl020102a_06.sm
10/15/2004 06:37:01 PM