F.A.I. RTE.	SECTION	COUNTY	TOTAL SHEETS	SHEET NO.
90/94	2004-064TS	COOK	40	26
STA.	TO STA.			
FED. ROAD DIST. NO. 1	ILLINOIS	FED. AID PROJECT		

62803

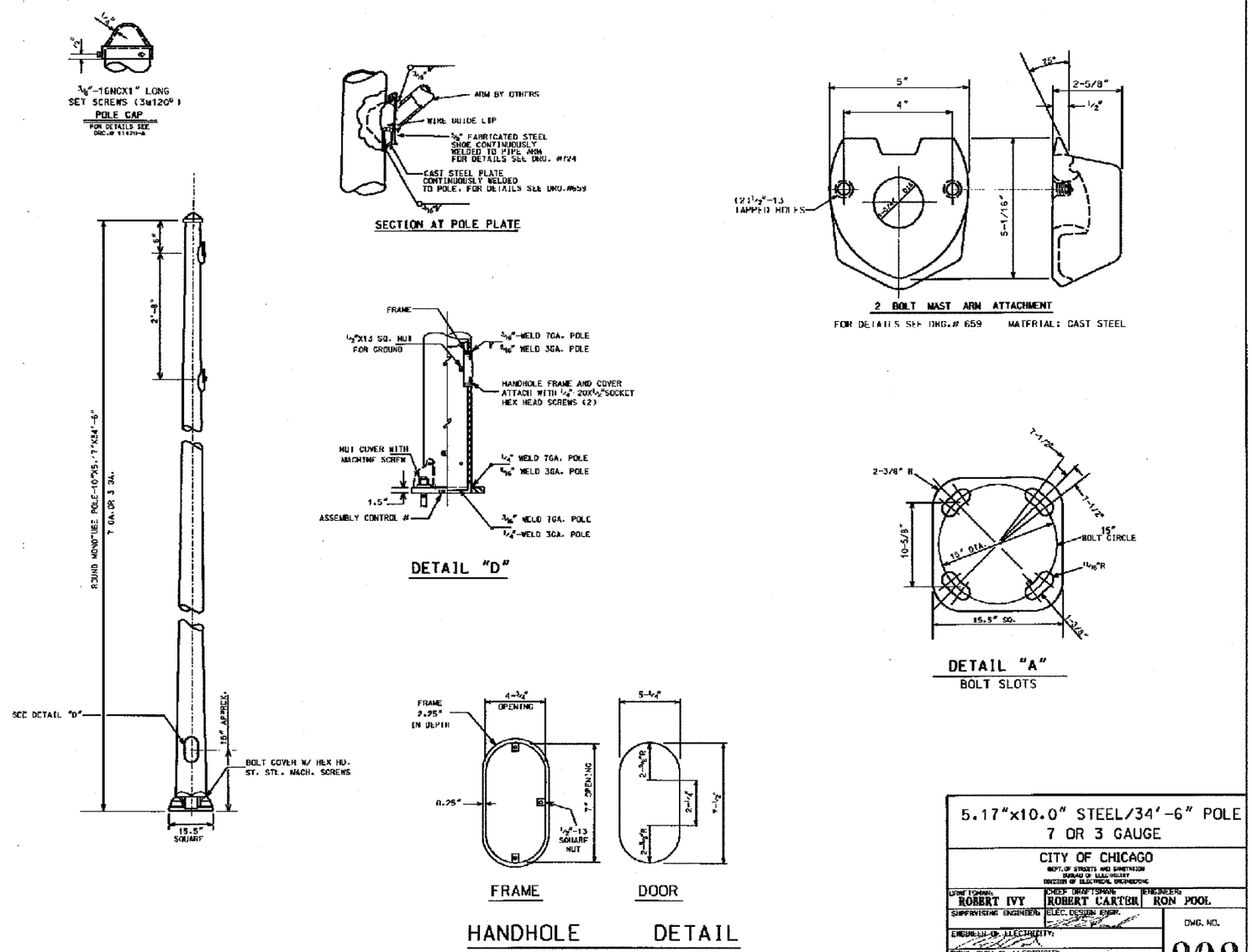

5.17"x10.0" STEEL/34'-6" POLE
7 OR 3 GAUGE

CITY OF CHICAGO
DEPT. OF STREETS AND SANITATION
BUREAU OF ELECTRICITY
DIVISION OF ELECTRICAL ENGINEERING

DRAFTSMAN: ROBERT IVY	CHIEF DRAFTSMAN: ROBERT CARTER	ENGINEER: RON POOL
SUPERVISING ENGINEER:	ELEC. DESIGN ENGR.	DWG. NO. 808
ENGINEER OF ELECTRICITY:		
DEPT. SUPT. OF ELECTRICITY:		
DEPUTY COMMISSIONER:		10-03-01

BOE-4

REVISIONS	
NAME	DATE

ILLINOIS DEPARTMENT OF TRANSPORTATION
F.A.I. 90/94 (DAN RYAN EXPRESSWAY)
TRAFFIC SIGNALS AT 51ST STREET AND WENTWORTH AVENUE / WELLS STREET

BOE STANDARD DETAILS

SCALE: NOT TO SCALE DRAWN BY: HAR
DATE: October 29, 2004 CHECKED BY: WDS

CTE ENGINEERS
CONSOER TOWNSEND ENVIRODYNE ENGINEERS, INC.
303 EAST WACKER DRIVE, SUITE 600
CHICAGO ILLINOIS 60601-5212, PHONE: (312) 938-0300

M:\P40468\Civil\4-Cntr\9-Add_Cntr\9B9-51st\BOE STAN\BOE09b811 2A.stt
10/25/2004 03:51:59 PM