SECTION	COUNTY	TOTAL SHEETS	SHEET NO.
02-00090-00-BT	DUPAGE	117	38
STA.	TO STA.		
IDOT PROJECT NO. M-8003(222)			
SALT CREEK GREENWAY TRAIL			

CONTRACT NO. 83713

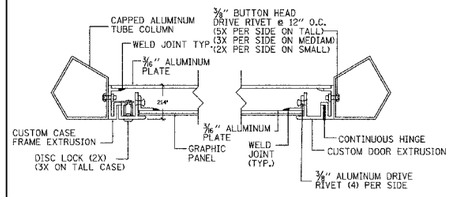

CABINET W/ LEXAN PANEL

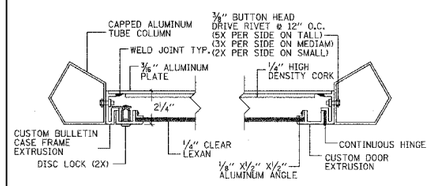

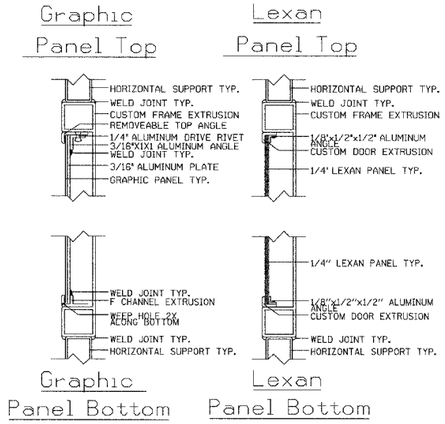

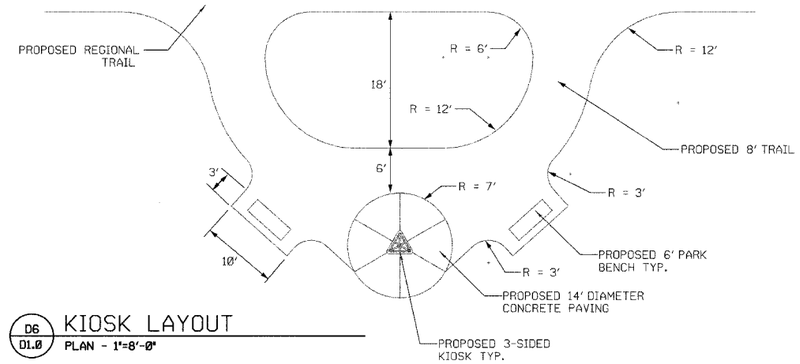

D6 D1.0 KIOSK LAYOUT
PLAN - 1"=8'-0"

D3 D1.0 KIOSK CABINET DETAILS
PLAN - 1"=4"

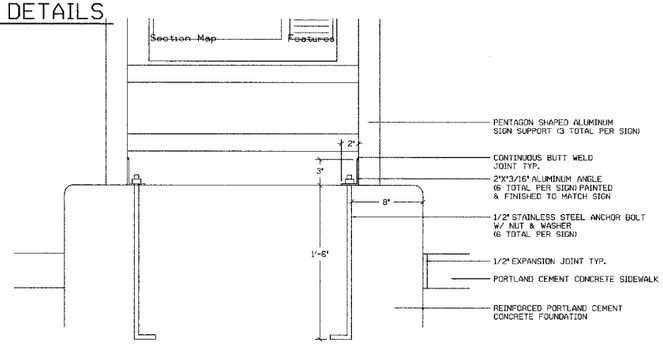

B3 D1.0 SURFACE MOUNT DETAIL
PLAN - N.T.S.

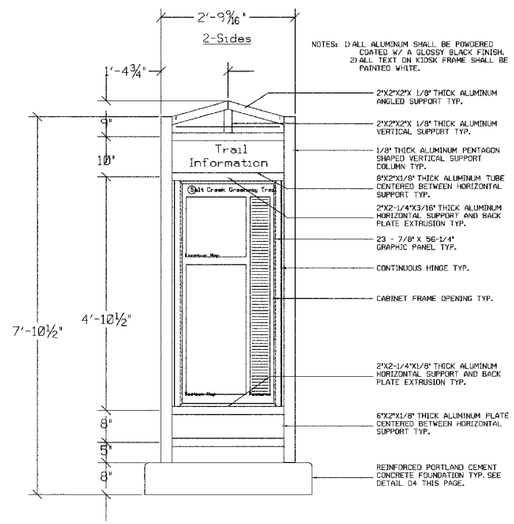

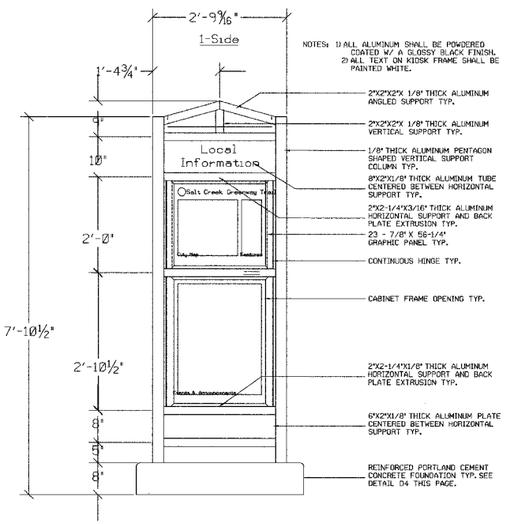

B6 D1.0 KIOSK DETAIL
ELEVATION - N.T.S.

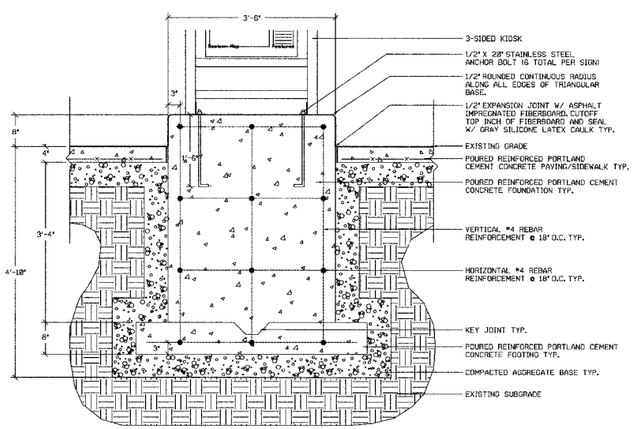

A3 D1.0 FOUNDATION DETAIL
PLAN - N.T.S.

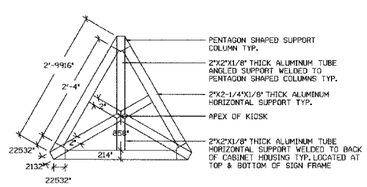

A5 D1.0 KIOSK TOP DETAIL
PLAN - 1/2"=1'-0"

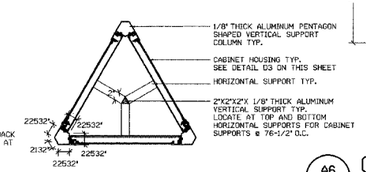

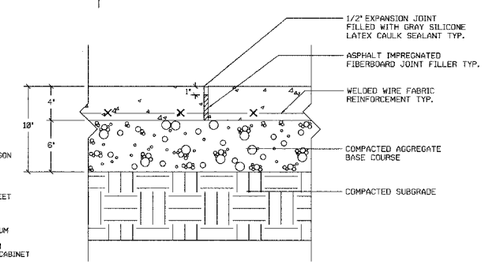

A6 D1.0 CONCRETE PAVING DETAIL
SECTION - N.T.S.

REVISIONS

NO.	NAME	DATE

URS
1701 GOLF ROAD, SUITE 1000
ROLLING MEADOWS, IL 60008
TEL (847) 228-0707
FAX (847) 228-1115

VILLAGE OF ADDISON

SALT CREEK GREENWAY TRAIL

INFORMATION KIOSK DETAILS

DATE: 10/22/04 DRAWN BY: MIA&VP

DESIGNED BY: MIA CHECKED BY: DDL