FAU	SECTION	COUNTY	TOTAL SHEETS	SHEET NO.
2667	02-00165-00-RP	DUPAGE	87	42
STA. 22+50		TO STA. 46+50		
FED. ROAD DIST. NO. 7	ILLINOIS	FED. AID PROJECT		

CONTRACT NO. 83768

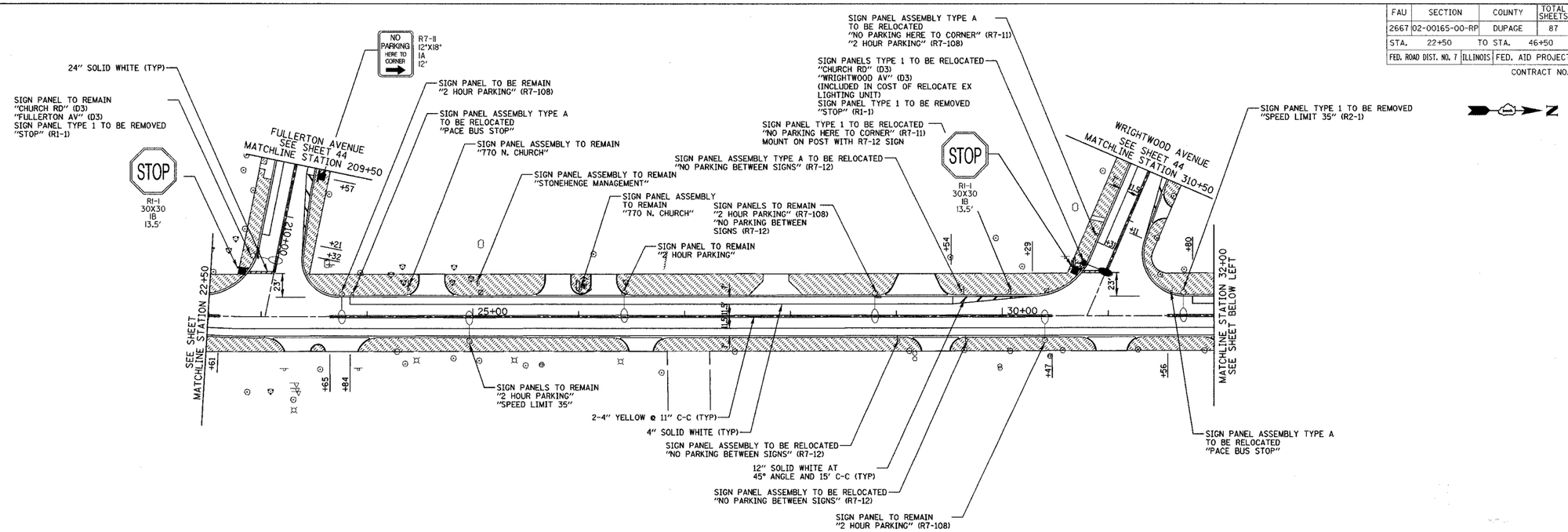

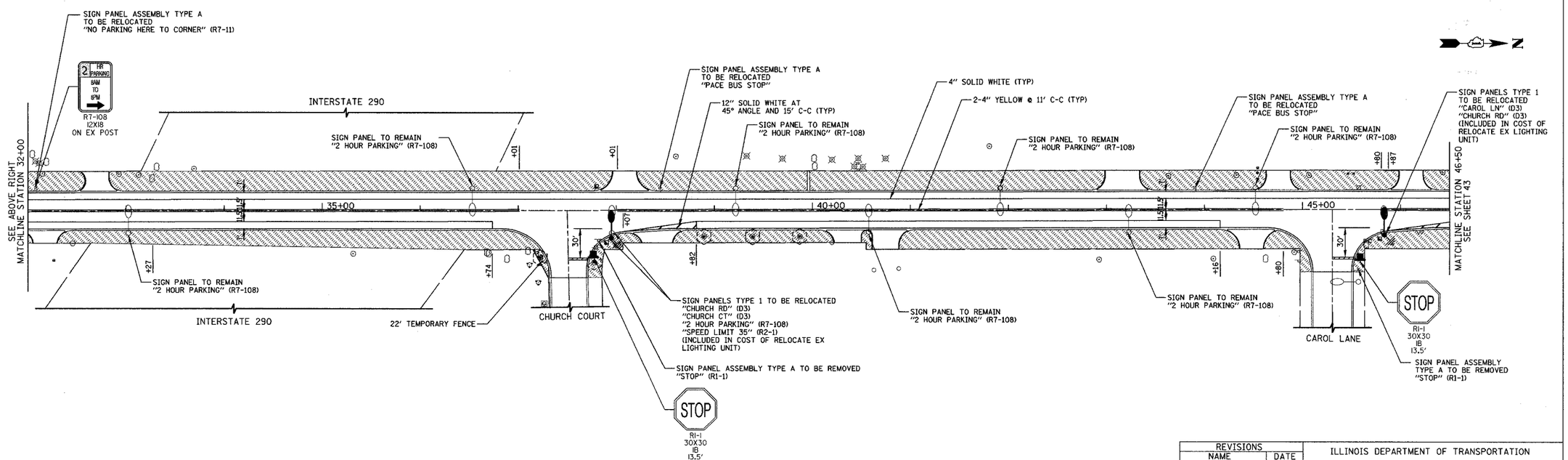

REVISIONS	
NAME	DATE
MJL	8-27-04

ILLINOIS DEPARTMENT OF TRANSPORTATION

LANDSCAPING, SIGNING, AND STRIPING

CHURCH ROAD

STATION 22+50 TO STATION 46+50

HORIZ. 50 0 50

SCALE IN FEET

DATE 7-9-04

DRAWN BY SAH

CHECKED BY MJL

PLAN: SURVEYED / PLOTTED / ELEM. NOTED / CADD FILE NAME / NOTE BOOK NO. / BY / DATE

PROFILE: SURVEYED / PLOTTED / ELEM. NOTED / STRUCTURE NOTAT'NS CHKD / NOTE BOOK NO. / BY / DATE

TRANSYSTEMS CORPORATION

© T:\DGN\00165\Ex\ILSDS.DGN 30/7/4/2004 10:14:56 AM