F. A. RTE.	SECTION	COUNTY	TOTAL SHEETS	SHEET NO.
2651	00-00067-00-PV	DU PAGE	146	89
STA. 10+70.70		TO STA. 66+16.00		
FED. ROAD DIST. NO.	ILLINOIS	FED. AID PROJECT		

ALTERNATE MATERIALS FOR RISERS	T (MIN.)
CONCRETE MASONRY UNITS	5"
PRECAST REINFORCED CONCRETE SECTIONS	4"
CAST-IN-PLACE CONCRETE	6"

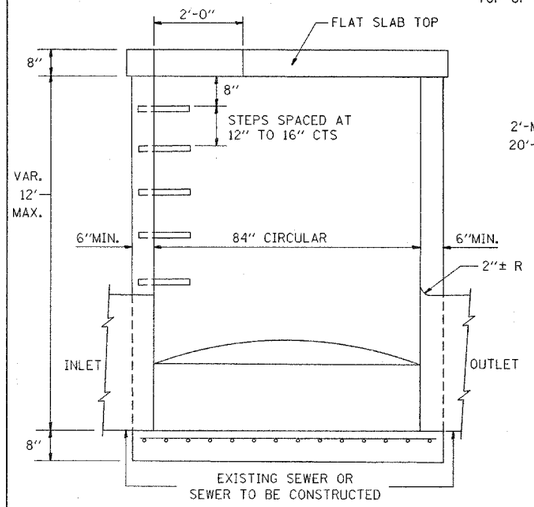

ELEVATION

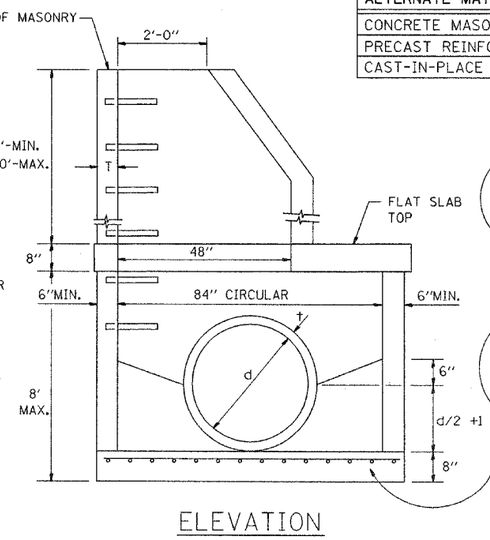

ELEVATION

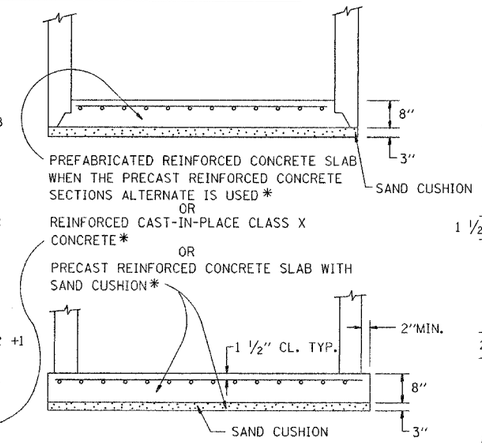

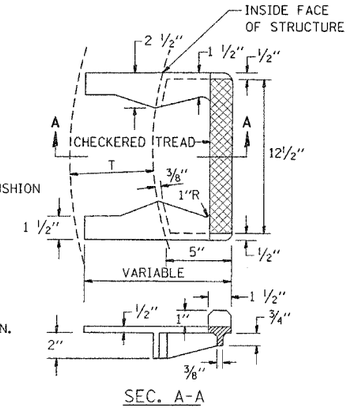

SEC. A-A

CAST IRON STEPS

GENERAL NOTES

ALTERNATE MATERIAL FOR THE WALLS MAY BE CONCRETE MASONRY UNITS, PRECAST REINFORCED CONCRETE SECTIONS OR CAST-IN-PLACE CONCRETE. THE CAST IRON STEPS AS DETAILED HEREON ARE TYPICAL. STEPS OF OTHER DESIGN AND MATERIAL THAT CONFORM TO THE MINIMUM REQUIREMENTS OF THE STEPS SHOWN MAY BE USED WHEN APPROVED BY THE ENGINEER.

CAST IRON STEPS SHALL BE GRAY IRON CONFORMING TO THE REQUIREMENTS OF ARTICLE 1006.14 OF THE STANDARD SPECIFICATIONS.

STEPS SHALL BE EMBEDDED INTO THE WALL A MINIMUM OF THREE(3) INCHES. STEPS SHALL NOT BE EXTENDED ON THE OUTSIDE.

STEPS SHALL BE OMITTED FOR WORK IN COOK COUNTY WHEN THE DEPTH OF THE MANHOLE IS TEN(10') OR LESS.

IN ADDITION TO THE REQUIREMENTS OF ARTICLE 612.13 OF THE STANDARD SPECIFICATIONS, THE CONTRACT UNIT PRICE FOR MANHOLES, TYPE A, 7'-DIAMETER SHALL INCLUDE THE SAND CUSHION WHEN REQUIRED, FURNISHING AND INSTALLING STEPS WHEN REQUIRED, FURNISHING AND COMPACTING THE SPECIFIED BACKFILL MATERIAL, AND FURNISHING AND INSTALLING FLAT SLAB TOP.

PRECAST FLAT SLAB TOP SHALL CONFORM TO ARTICLES 505.01 THRU 505.05 OF THE STANDARD SPECIFICATIONS EXCEPT THAT THE CONCRETE STRENGTH SHALL BE 4,000 PSI AFTER 28 DAYS. REINFORCEMENT BARS AND WELDED WIRE FABRIC SHALL CONFORM TO THE REQUIREMENTS OF ARTICLE 1006.10. ONLY GRADE 60 REINFORCEMENT BARS WILL BE PERMITTED.

BOTTOM SLAB SHALL BE REINFORCED BY EITHER REINFORCEMENT BARS OR WELDED WIRE FABRIC. THE MINIMUM REINFORCEMENT SHALL BE 0.46 SQUARE INCH PER LINEAR FOOT IN BOTH DIRECTIONS.

JOINT CONFIGURATION AND DIMENSIONS OF FLAT SLAB TOP SHALL MATCH AND FIT THE RISER JOINT DETAIL.

LIFTING DEVICES SHALL BE APPROVED BY THE ENGINEER.

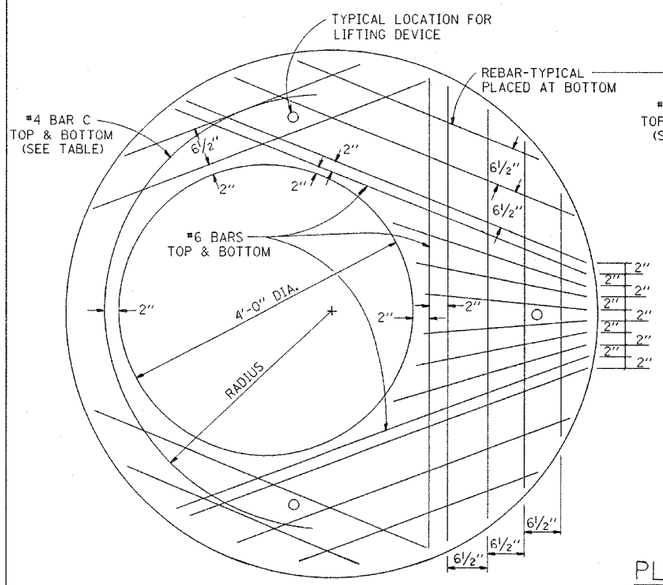

PLAN

SHOWING REBAR REINFORCEMENT

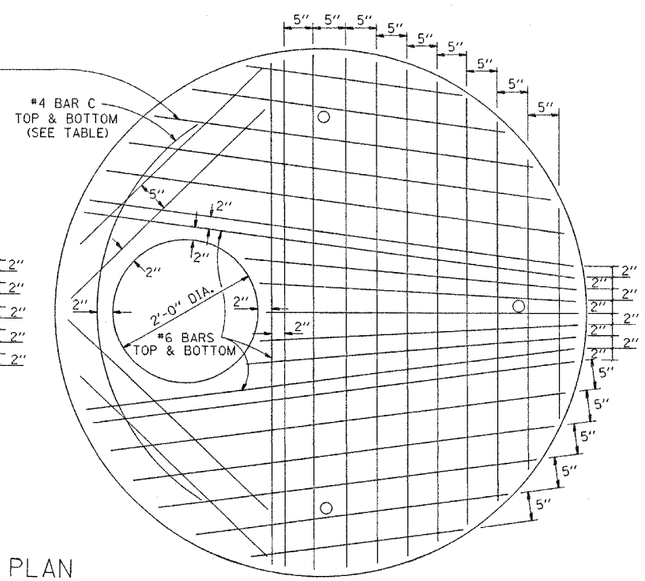

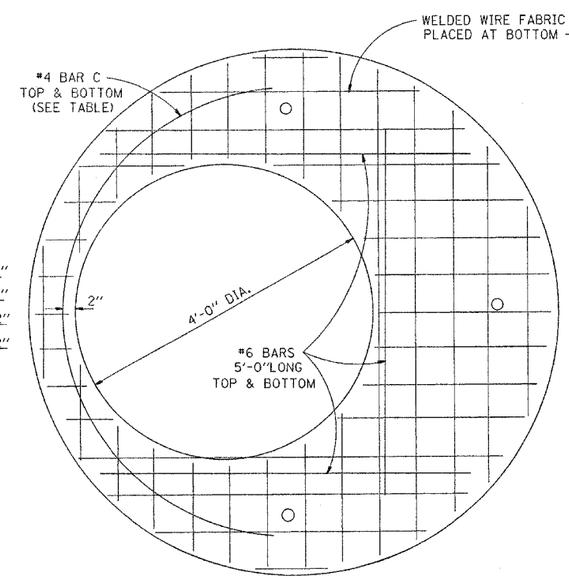

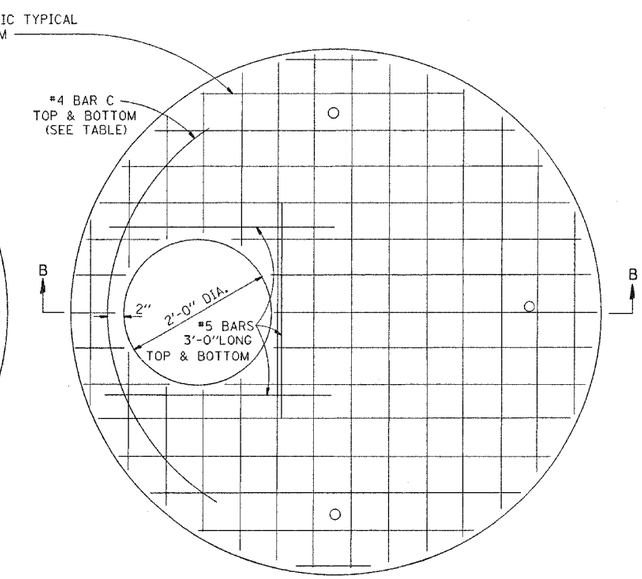

PLAN

SHOWING WELDED WIRE FABRIC REINFORCEMENT

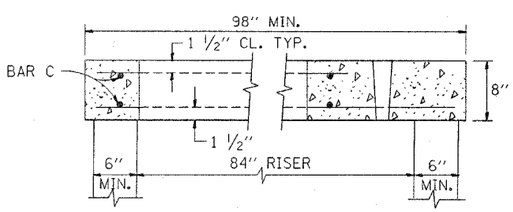

SECTION B-B

TABLE

DIAMETER OF OPENING	REINFORCEMENT "A S" WWF OR EACH DIRECTION	BAR SIZE	BAR C SIZE	BAR C LENGTH	BAR C RADIUS
2'-0"	1.06 SQ.IN./LIN.FT.	#6	#4	6'-0"	38"
4'-0"	0.82 SQ.IN./LIN.FT.	#6	#4	9'-0"	38"

NOTE: THIS STRUCTURE SHOULD BE USED WITH PIPES SIZE 54" DIA. OR SMALLER.

REVISIONS	
NAME	DATE

ILLINOIS DEPARTMENT OF TRANSPORTATION

MANHOLE TYPE A
7 FOOT DIAMETER

SCALE: VERT. HORIZ.
DATE $$DATE$$
DRAWN BY
CHECKED BY

BD600-11 (BD-37)

G:\15367\Phase2\07-Design\05-Dwgs\sht1\36fsfddt.dgn
11-NOV-2004

DATE-TIME
DGN-SPEC
V1=BD37