LEGEND

- WORK AREA
- IMPACT ATTENUATORS, TEMPORARY (NON-REDIRECTIVE, NARROW)
- TYPE III BARRICADE
- TEMPORARY CONCRETE BARRIER
- DRUM WITH STEADY BURN MONODIRECTIONAL LIGHT (PER HWY. STD. 701321-10)
- SIGN
- DETECTOR LOOPS
- TRAFFIC SIGNAL
- TEMPORARY RUMBLE STRIPS
- DOUBLE VERTICAL PANELS

PRESTAGE CONSTRUCTION:

1. CONSTRUCT TEMPORARY PAVEMENT ON SHOULDER FROM STA. 336+97 TO STA. 340+65 RT IN ACCORDANCE WITH HIGHWAY STANDARD 701326 AND AS SHOWN IN THE PLANS.

STAGE I CONSTRUCTION:

1. REMOVE CONFLICTING EXISTING PAVEMENT MARKING LINES AND RAISED REFLECTIVE PAVEMENT MARKERS.
2. CLOSE WEST HALF OF IL-84 IN ACCORDANCE WITH HIGHWAY STANDARD 701321 AND AS SHOWN IN THE PLANS.
3. PERFORM WEST HALF STRUCTURAL AND APPROACH ROADWAY RECONSTRUCTION AS SHOWN IN THE PLANS.
4. CONSTRUCT TEMPORARY PAVEMENT ON SHOULDER FROM STA. 339+05 TO STA. 340+24 LT.

NOTES:

1. SEE HIGHWAY STANDARD 701321 FOR PLACEMENT OF DEVICES, INFORMATION, ETC.
2. ACCESS TO BE MAINTAINED TO DRIVEWAYS AT ALL TIMES DURING CONSTRUCTION.

SEQUENCE OF OPERATIONS						
PHASE	A			B		
INTERVAL	1	2	3	4	5	6
NORTHBOUND	G	Y	R	R	R	R
SOUTHBOUND	R	R	R	G	Y	R

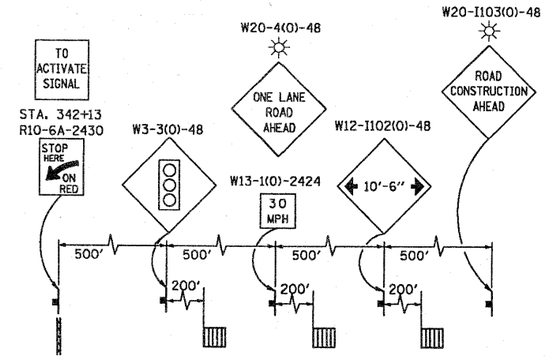

DETAIL "B"

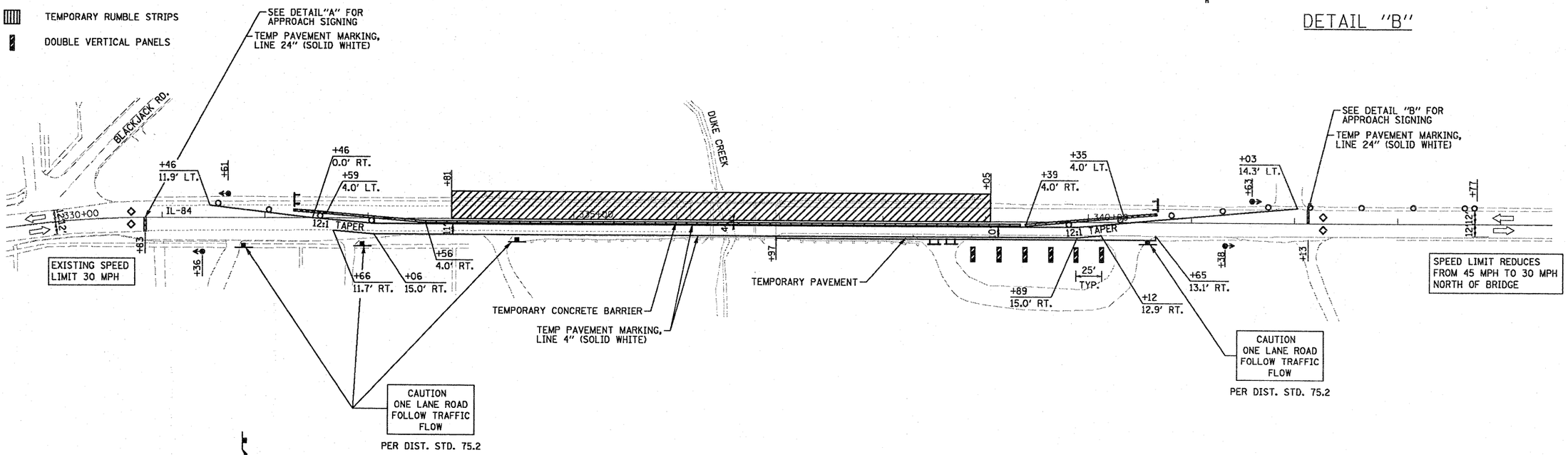

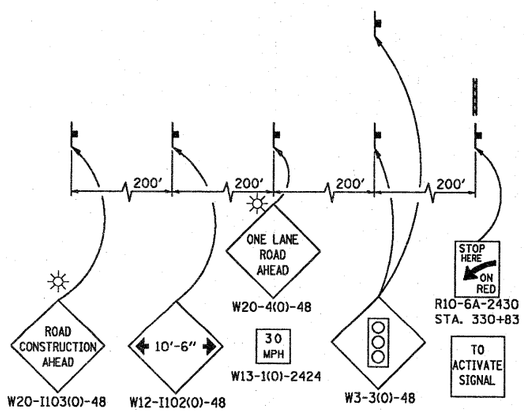

DETAIL "A"

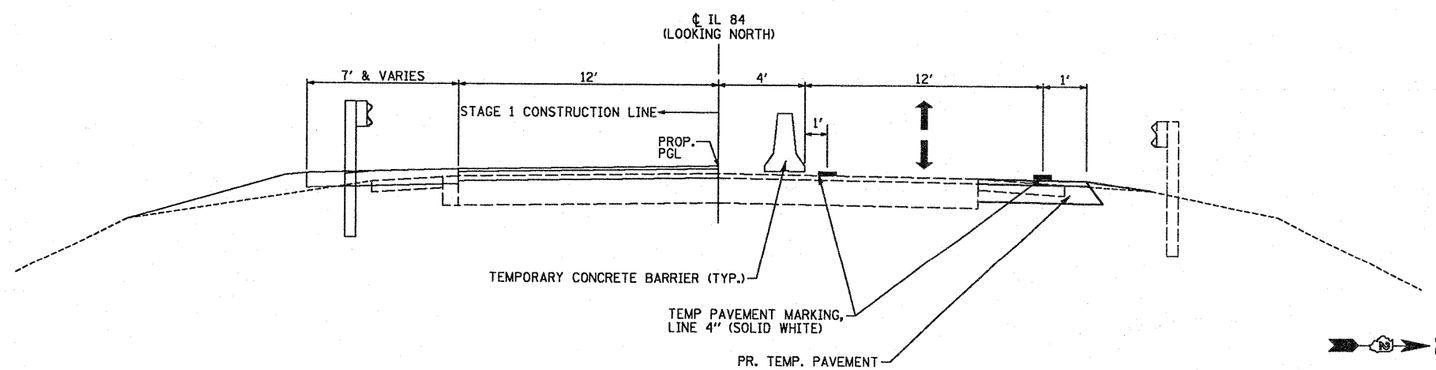

0 50 100
SCALE IN FEET

FILE NAME = ...\D264b26-sht-stagingl.dgn	USER NAME = Plotted by Scott Wilkinson	DESIGNED - SEW	REVISED -
		DRAWN - SEW	REVISED -
	PLOT SCALE = 100.0000 ' / IN.	CHECKED - FML	REVISED -
	PLOT DATE = 12/1/2010	DATE - 10-15-2010	REVISED -

STATE OF ILLINOIS
DEPARTMENT OF TRANSPORTATION

MAINTENANCE OF TRAFFIC PLAN - STAGE 1
IL-84 OVER DUKE CREEK

SCALE: 1" = 50' | SHEET NO. 1 OF 1 SHEETS | STA. 330+00 TO STA. 343+00

F.A.P. RTE.	SECTION	COUNTY	TOTAL SHEETS	SHEET NO.
308	103BR-3 & 104BR-1	JO DAVIESS	126	31

CONTRACT NO. 64B26

ILLINOIS FED. AID PROJECT