STATE OF ILLINOIS
DEPARTMENT OF TRANSPORTATION

Benchmark: BM#410 is a plug on the west side of the existing North Abutment. Sta. 165+92.39; 17.5 feet left; Elev. 608.548.

Existing Structure: S.N. 043-0038 was built in 1982 as F.A. Route 18, Section 104-BR. The superstructure consists of 3 simple spans that are precast prestressed concrete deck beams, overlaid with bituminous concrete, supported by 2 reinforced concrete solid pile bent piers and 2 reinforced concrete spill thru abutments on steel piles. Supplemental steel W-Beams were added below 11 deck beams in 2008. The bridge is 111'-0" back to back abutments, and the width is 34'-0" out to out plus railing posts. The bridge is to be removed and replaced using stage construction. Supplemental steel W-Beams are to be salvaged and delivered to a location to be designated by the District.

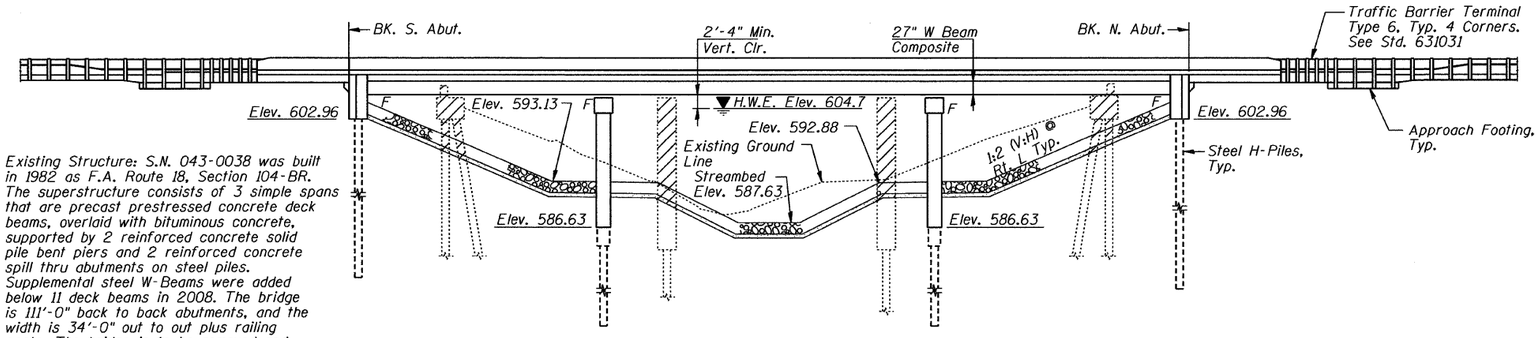

ELEVATION

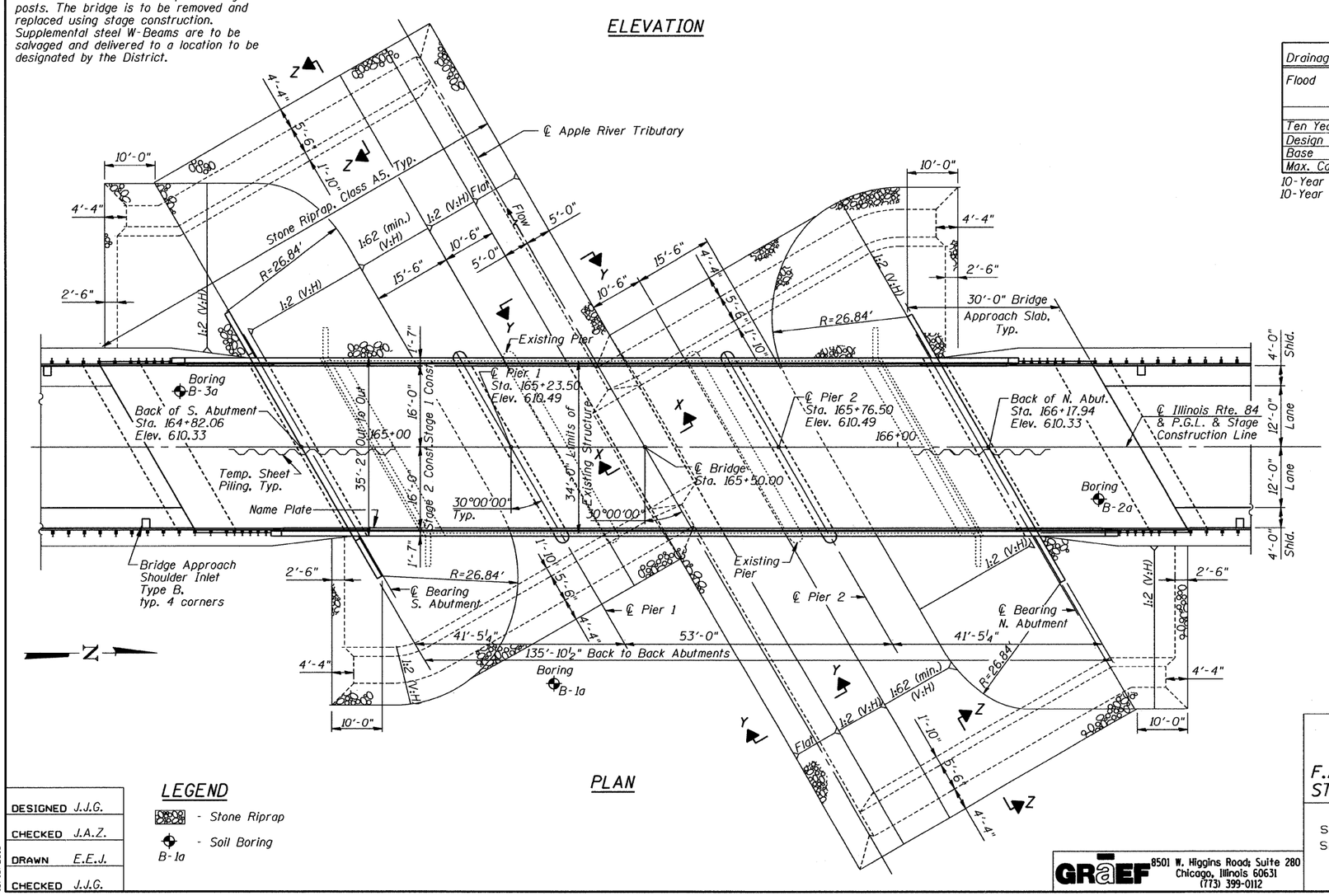

PLAN

LEGEND

- Stone Riprap
- Soil Boring B-1a

DESIGN SPECIFICATIONS

2007 AASHTO LRFD Bridge Design Specifications with 2008 & 2009 Interims

DESIGN STRESSES

FIELD UNITS

f'c = 3,500 psi
fy = 60,000 psi (Reinforcement)
fy = 50,000 psi (Structural Steel M270 Grade 50W)

STATION 165+50
BUILT 201_ BY
STATE OF ILLINOIS
F.A.P. RT. 308 SEC. 104BR-1
LOADING HL-93
STR. NO. 043-0078

NAME PLATE

See Std. 515001

SEISMIC DATA

Seismic Performance Zone (SPZ) = 1
Design Spectral Acceleration at 1.0 sec. (S_{D1}) = 0.05g
Design Spectral Acceleration at 0.2 sec. (S_{DS}) = 0.08g
Soil Site Class = C
2009 AASHTO LRFD Bridge Design Specifications

LOADING HL-93

Allow 50#/sq. ft. for future wearing surface.

WATERWAY INFORMATION TABLE

Drainage Area = 3.85 sq. mi. — Existing Low Grade Elev. - 608.49 ft. @ Sta. 159+94; Proposed Low Grade Elev. - 608.49 ft. @ Sta. 159+94

Flood	Frequency (Year)	Discharge (C.F.S.)	Waterway Opening (Sq.Ft.)		Natural H.W.E.	Head (Feet)		Headwater El.	
			Exist.	Prop.		Exist.	Prop.	Exist.	Prop.
Ten Year	10	1010	819	1052	604.7	1.1	0.6	605.8	605.3
Design	50	1690	819	1052	604.7	1.2	0.6	605.8	605.3
Base	100	2000	819	1052	604.7	1.2	0.6	605.9	605.3
Max. Calc.	500	2790	819	1052	604.7	1.3	0.7	606.0	605.4

10-Year Velocity through Existing Structure = 1.2 fps
10-Year Velocity through Proposed Structure = 1.1 fps

DESIGN SCOUR ELEVATION TABLE

Design Scour Elevation (Ft.)	S. Abut.	Pier 1	Pier 2	N. Abut.
	602.96	583.63	583.63	602.96

NOTES:

1. For Sections X-X, Y-Y, & Z-Z, See Sheet SA2.

APPROVED
FOR STRUCTURAL ADEQUACY ONLY
Rudolf E. Anderson (TDD)
ENGINEER OF BRIDGES AND STRUCTURES

STATE OF ILLINOIS JOHN A. ZERKO 081-004706 CHICAGO, IL LICENSED STRUCTURAL ENGINEER
10/15/2010
EXPIRES 11/30/2012

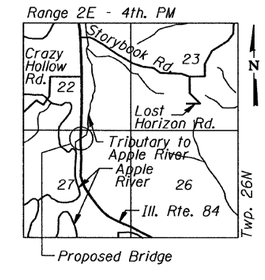

LOCATION SKETCH

GENERAL PLAN & ELEVATION
ILLINOIS RTE. 84 OVER APPLE RIVER TRIBUTARY
F.A.P. RTE. 308 SEC. 104BR-1 JO DAVIESS COUNTY
STATION 165+50.00 STRUCTURE NO. 043-0078

SHEET NO.	F.A.P. RTE.	SECTION	COUNTY	TOTAL SHEETS	SHEET NO.
SA1 OF 25 SHEETS	308	104BR-1	JO DAVIESS	126	37
			CONTRACT NO. 64B26		
	10-15-2010	ILLINOIS	FED. AID PROJECT		

DESIGNED	J.J.G.
CHECKED	J.A.Z.
DRAWN	E.E.J.
CHECKED	J.J.G.

GRÄEF 8501 W. Higgins Road; Suite 280 Chicago, Illinois 60631 (773) 399-0112

h:\jobs2010\2010381\cad\structural\dgn\00\SA01.GPAE.dgn
10/13/2010