STATE OF ILLINOIS
DEPARTMENT OF TRANSPORTATION

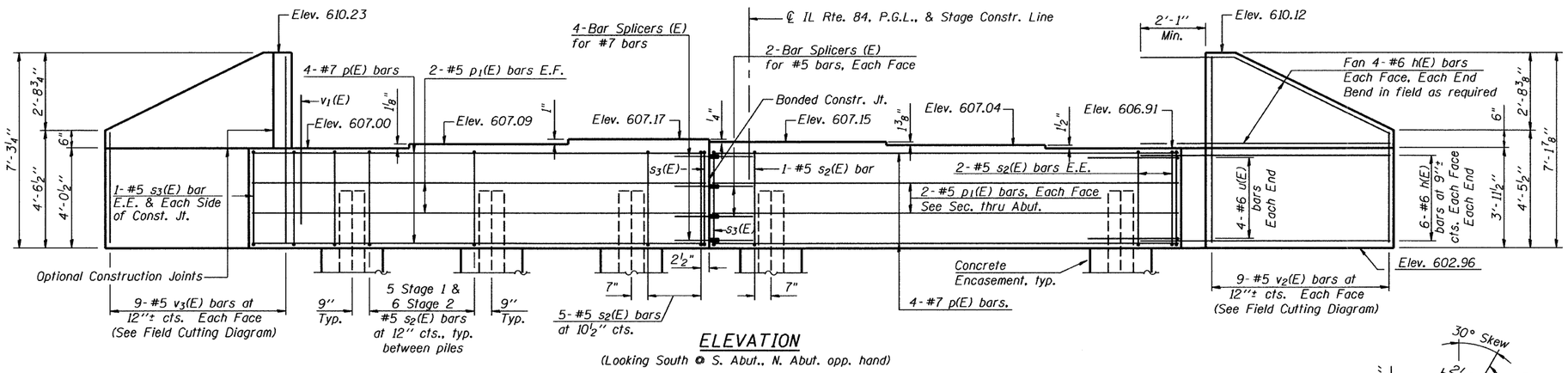

ELEVATION

(Looking South @ S. Abut., N. Abut. opp. hand)

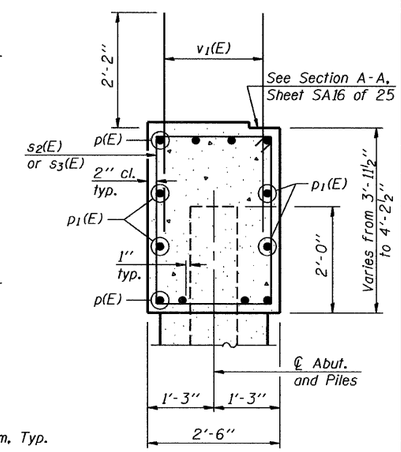

SEC. THRU ABUT.

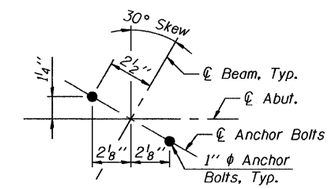

DETAIL "A"

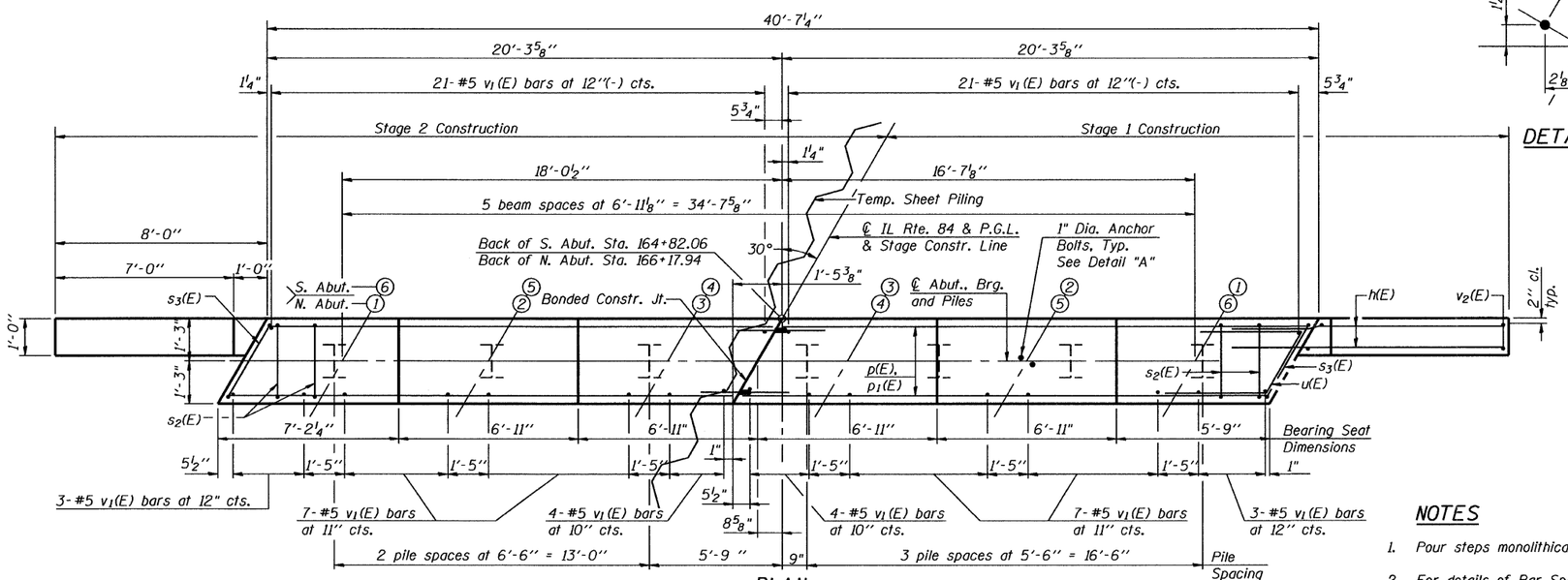

PLAN

(South Abut. Shown, North Abut. opp. hand)

TWO ABUTMENTS BILL OF MATERIAL

Bar	No.	Size	Length	Shape
h(E)	80	#6	10'-5"	
p(E)	32	#7	19'-11"	
p1(E)	16	#5	19'-11"	
s2(E)	74	#5	12'-6"	
s3(E)	8	#5	13'-2"	
u(E)	16	#6	8'-4"	
v1(E)	168	#5	4'-4"	
v2(E)	18	#5	10'-10"	
v3(E)	18	#5	11'-0"	
Structure Excavation		Cu. Yd.	220	
Concrete Structures		Cu. Yd.	37.1	
Concrete Encasement		Cu. Yd.	4.7	
Reinforcement Bars, Epoxy Coated		Pound	5,330	
Bar Splicers		Each	24	
Furnishing Steel Piles HP12x63		Foot	534	
Driving Piles		Foot	534	
Test Pile HP12x63		Each	2	
Pile Shoes		Each	14	

NOTES

1. Pour steps monolithically with cap.
2. For details of Bar Splicers, see sheet SA20 of 25.
3. For details of piles and Concrete Encasement, see sheet SA19 of 25.
4. Estimated pile lengths have been increased by 2' for penetration into rock.

PILE DATA

Pile Type and Size: Steel HP12x63 with Pile Shoes
Nominal Required Bearing: 497 kip
Factored Resistance Available: 245 kip
Est. Length: 43 ft @ S. Abut., 46 ft @ N. Abut. (See Note 4)
No. Production Piles Per Abutment: 6
No. Test Piles per Abutment: 1
Estimated Top of Rock Elevation: 564.00 @ S. Abut.
561.00 @ N. Abut.

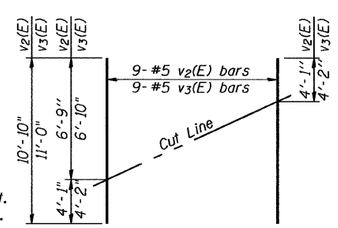

FIELD CUTTING DIAGRAM

Order v2(E) & v3(E) full length. Cut as shown and use remainder of bars in opposite face.

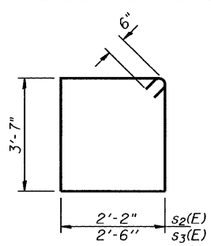

BARS s2(E) & s3(E)

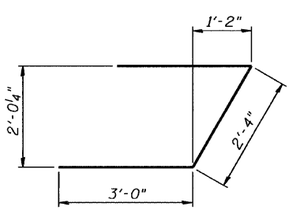

BAR u(E)

DESIGNED	E.E.J.
CHECKED	J.Z.
DRAWN	E.E.J.
CHECKED	J.Z.

GRAEF 8501 W. Higgins Road; Suite 280 Chicago, Illinois 60631 (773) 399-0112

ABUTMENTS

Illinois Rte. 84 Over Apple River Tributary

STATION 165+50.00 STRUCTURE NO. 043-0078

SHEET NO.	F.A.P. RTE.	SECTION	COUNTY	TOTAL SHEETS	SHEET NO.
SA17 OF 25 SHEETS	308	104BR-1	JO DAVIESS	126	53
			CONTRACT NO. 64B26		
	10-15-2010	ILLINOIS	FED. AID PROJECT		

h:\jobs2010\2010311\cad\structural\dgn\00\SA17_ABUTMENTS.dgn
10/13/2010