Benchmark: BM#407 is a mark on the west side of the existing South Abutment. Sta. 336+33.85; 17.11 feet left; Elev. 629.586.

STATE OF ILLINOIS
DEPARTMENT OF TRANSPORTATION

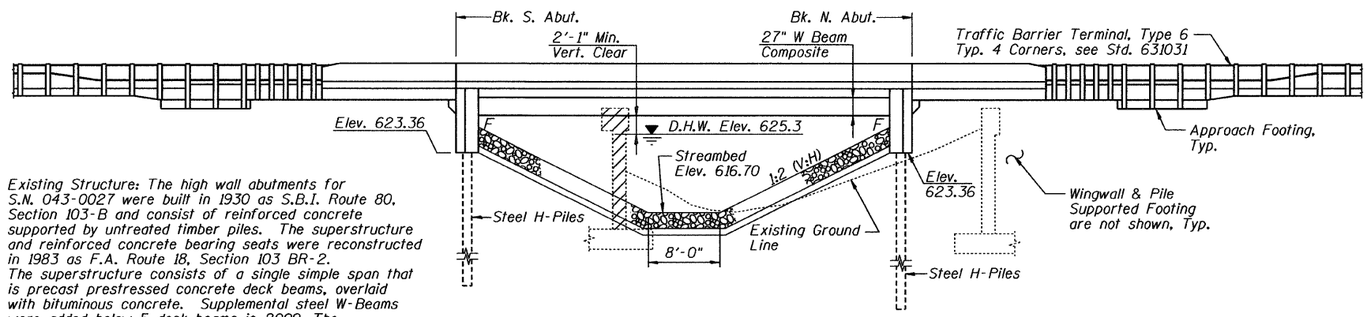

ELEVATION

Existing Structure: The high wall abutments for S.N. 043-0027 were built in 1930 as S.B.I. Route 80, Section 103-B and consist of reinforced concrete supported by untreated timber piles. The superstructure and reinforced concrete bearing seats were reconstructed in 1983 as F.A. Route 18, Section 103 BR-2. The superstructure consists of a single simple span that is precast prestressed concrete deck beams, overlaid with bituminous concrete. Supplemental steel W-Beams were added below 5 deck beams in 2009. The bridge is 44'-6" back to back abutment caps (42'-9½" back to back abutments), and the width is 33'-0" out to out plus railing posts. The bridge is to be removed and replaced using stage construction. Supplemental steel W-Beams are to be salvaged and delivered to a location to be designated by the District.

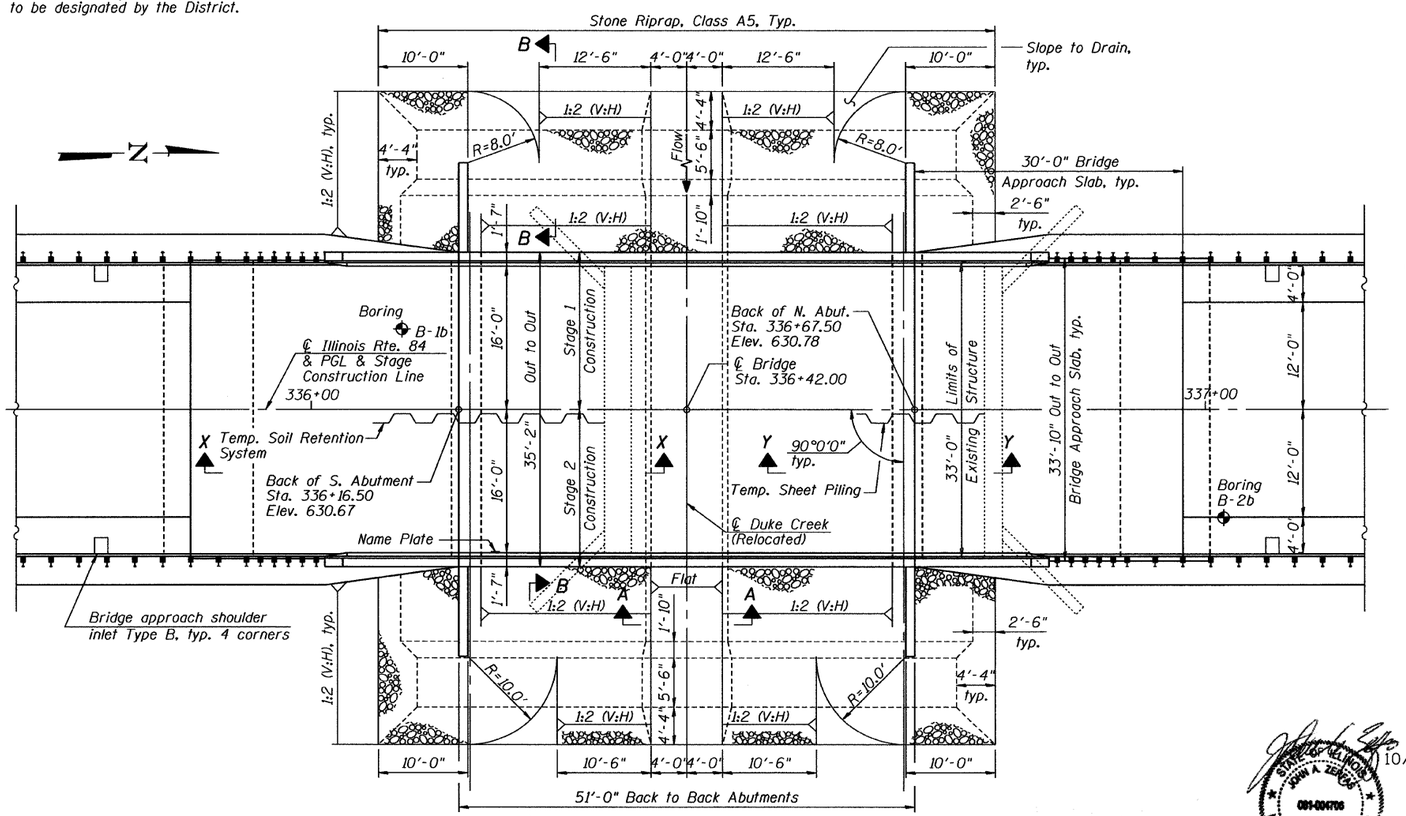

PLAN

STATION 336+42
BUILT 201_ BY
STATE OF ILLINOIS
F.A.P. RT. 308 SEC. 103BR-3
LOADING HL-93
STRUCTURE NO. 043-0079

NAME PLATE

See Std. 515001

DESIGN SCOUR ELEVATION TABLE

Design Scour Elevation (Ft.)	S. Abut.	N. Abut.
	623.36	623.36

DESIGN SPECIFICATIONS

2007 AASHTO LRFD Bridge Design Specifications with 2008 & 2009 Interims

DESIGN STRESSES

FIELD UNITS

f'c = 3,500 psi
fy = 60,000 psi (Reinforcement)
fy = 50,000 psi (Structural Steel M270 Grade 50W)

SEISMIC DATA

Seismic Performance Zone (SPZ) = 1
Design Spectral Acceleration at 1.0 sec. (S_{D1}) = 0.05g
Design Spectral Acceleration at 0.2 sec. (S_{DS}) = 0.08g
Soil Site Class = C

LOADING HL-93

Allow 50#/sq. ft. for future wearing surface.

WATERWAY INFORMATION TABLE

Drainage Area = 2.6 sq. mi.
Existing Low Grade Elev. - 629.66 ft. @ Sta. 334+14
Proposed Low Grade Elev. - 629.66 ft. @ Sta. 334+14

Flood	Frequency (Year)	Discharge (C.F.S.)	Waterway Opening (Sq. Ft.)		Natural H.W.E.	Head - (Feet)		Headwater El.	
			Exist.	Prop.		Exist.	Prop.	Exist.	Prop.
Ten Year	10	760	149.0	186.5	624.5	0.3	0.3	624.9	624.9
Design	50	1270	189.8	227.1	625.3	0.9	0.9	626.2	626.2
Base	100	1500	201.1	238.3	625.6	1.1	1.1	626.7	626.7
Max. Calc.	500	2100	226.3	263.4	626.1	1.9	1.7	628.0	627.9

10-Year Velocity through Existing Structure = 5.2 fps
10-Year Velocity through Proposed Structure = 4.08 fps

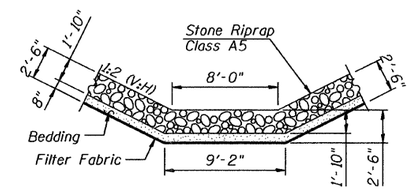

SECTION A-A

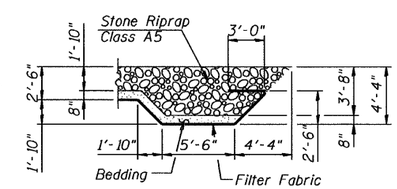

SECTION B-B

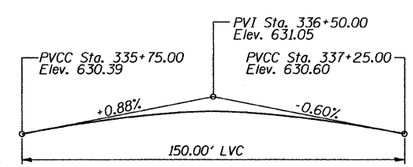

PROFILE GRADE LINE: ILLINOIS RTE. 84

Along ℄ Roadway

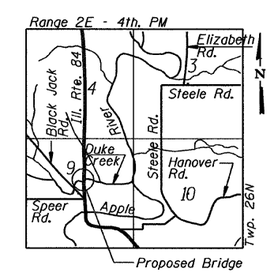

LOCATION SKETCH

10/15/2010

STATE OF ILLINOIS JOHN A. ZERKOS 081-004706 CHICAGO, IL LICENSED STRUCTURAL ENGINEER

EXPIRES 11/30/2012

LEGEND

- Stone Riprap
- B-1b - Soil Boring

NOTES

1. For Sections X-X and Y-Y, see Sheet SB2 of 23.

GRÄEF 8501 W. Higgins Road; Suite 280 Chicago, Illinois 60631 (773) 399-0112

GENERAL PLAN & ELEVATION
ILLINOIS RTE. 84 OVER DUKE CREEK

F.A.P. RTE. 308 SEC. 103BR-3 JO DAVIESS COUNTY
STATION 336+42.00 STRUCTURE NO. 043-0079

SHEET NO.	F.A.P. RTE.	SECTION	COUNTY	TOTAL SHEETS	SHEET NO.
SB1 OF 23 SHEETS	308	103BR-3	JO DAVIESS	126	62
			CONTRACT NO. 64B26		
	10-15-2010	ILLINOIS	FED. AID PROJECT		

DESIGNED	J.J.G.
CHECKED	J.A.Z.
DRAWN	E.E.J.
CHECKED	J.J.G.

H:\Jobs2010\2010301\CAD\Structural\dgn\00\S001_GPAE.dgn
10/12/2010