STATE OF ILLINOIS
DEPARTMENT OF TRANSPORTATION

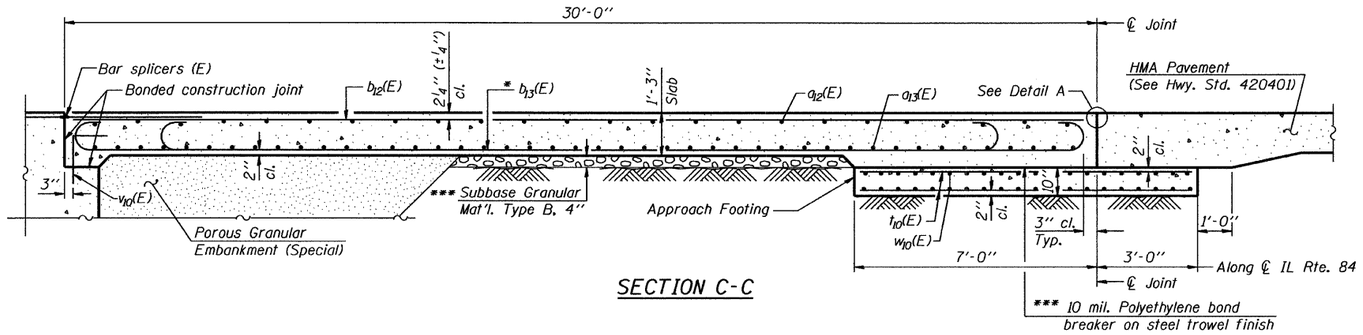

SECTION C-C

NOTES

1. See Sheet SB12 of 23 for Detail A and View B-B.
2. Approach slab and parapet concrete shall be paid for as Concrete Superstructure.
3. Approach footing concrete shall be paid for as Concrete Structures.
4. Reinforcement shall be paid for as Reinforcement Bars, Epoxy Coated.
5. For v_{10}(E) and d_{10}(E) bar details, see sheet SB10 & SB11 of 23.
6. The approach footing maximum applied service bearing pressure (Qmax) = 2.0 ksf.
7. For bar splicer details, see sheet SB19 of 23.
8. Cost of excavation for approach footing is included with Concrete Structures.
9. For Porous Granular Embankment (Special) and drainage treatment details, see Sheet SB2 of 23.

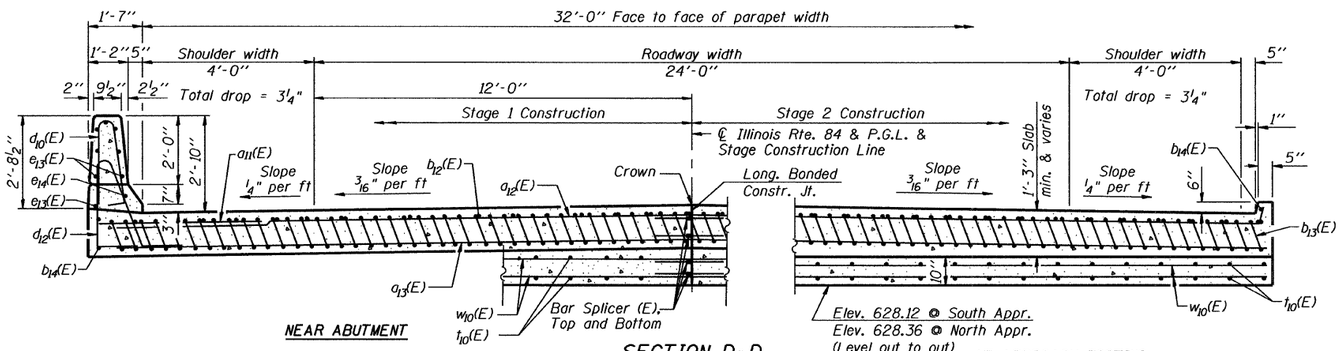

NEAR ABUTMENT

SECTION D-D

(See Plan for dimensions not shown)

AT APPROACH FOOTING

* Tilt #9 b_{13}(E) bars as required to maintain clearance.

*** Cost is included with Concrete Superstructure.

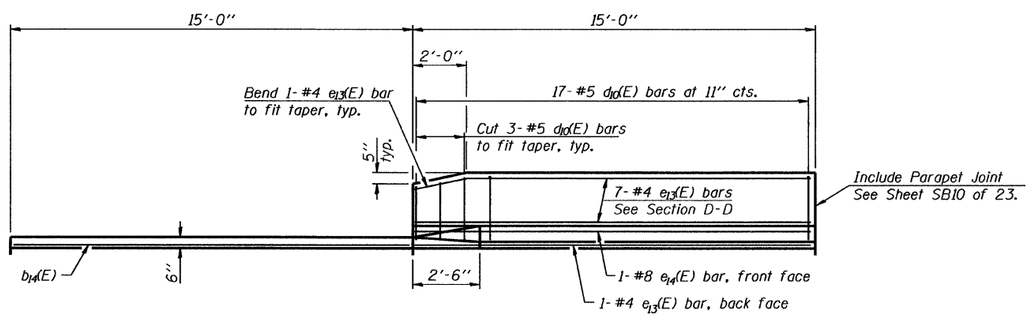

VIEW E-E

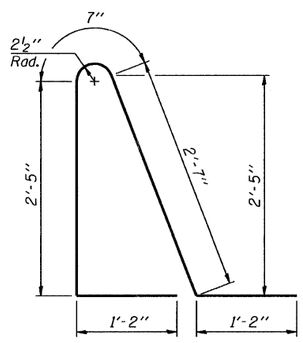

BAR d_{12}(E)

TWO APPROACHES BILL OF MATERIAL

Bar	No.	Size	Length	Shape
a_{11}(E)	48	#6	6'-6"	
a_{12}(E)	100	#4	17'-0"	
a_{13}(E)	184	#5	16'-7"	
b_{12}(E)	56	#4	29'-8"	
b_{13}(E)	164	#9	29'-9"	
b_{14}(E)	8	#4	14'-8"	
d_{10}(E)	68	#5	5'-7"	
d_{12}(E)	68	#5	7'-11"	
e_{13}(E)	32	#4	14'-8"	
e_{14}(E)	4	#8	14'-8"	
t_{10}(E)	144	#4	9'-8"	
w_{10}(E)	160	#5	16'-7"	
Concrete Structures			Cu. Yd.	20.9
Concrete Superstructure			Cu. Yd.	108.8
Bridge Deck Grooving			Sq. Yd.	204
Protective Coat			Sq. Yd.	248
Reinforcement Bars, Epoxy Coated			Pound	27,690
Bar Splicers			Each	222

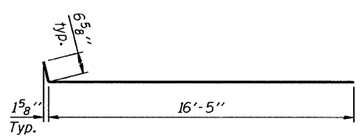

BAR a_{12}(E)

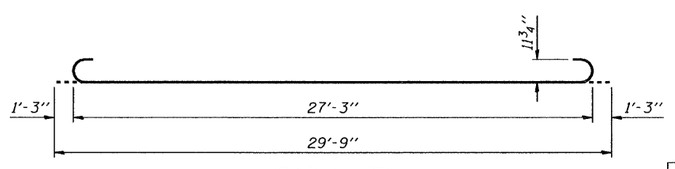

BAR b_{13}(E)

DESIGNED	J.Z.
CHECKED	E.E.J.
DRAWN	R.B.H.
CHECKED	J.Z.

h:\jobs2010\2010301\cad\structural\dgn\02\SB13_APPROACH_SLAB_DETAILS.dgn
10/12/2010

GRÄEF 8501 W. Higgins Road; Suite 280 Chicago, Illinois 60631 (773) 399-0112

BRIDGE APPROACH SLAB DETAILS

Illinois Rte. 84 Over Duke Creek

STATION 336+42.00 STRUCTURE NO. 043-0079

SHEET NO. SB13 OF 23 SHEETS	F.A.P. RTE.	SECTION	COUNTY	TOTAL SHEETS	SHEET NO.
	308	103BR-3	JO DAVIESS	126	74
			CONTRACT NO. 64B26		
	10-15-2010	ILLINOIS	FED. AID PROJECT		