STATE OF ILLINOIS
DEPARTMENT OF TRANSPORTATION

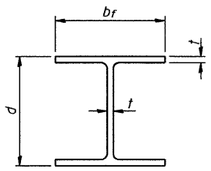

STEEL PILE TABLE

Designation	Depth d	Flange width b_f	Web and Flange thickness t	Encasement diameter A
HP 14x117	14 1/4"	14 7/8"	13/16"	30"
x102	14"	14 3/4"	11/16"	30"
x89	13 7/8"	14 3/4"	5/8"	30"
x73	13 5/8"	14 5/8"	1/2"	30"
HP 12x84	12 1/4"	12 1/4"	11/16"	24"
x74	12 1/8"	12 1/4"	5/8"	24"
x63	12"	12 1/8"	1/2"	24"
x53	11 3/4"	12"	7/16"	24"
HP 10x57	10"	10 1/4"	9/16"	24"
x42	9 3/4"	10 1/8"	7/16"	24"
HP 8x36	8"	8 1/8"	7/16"	18"

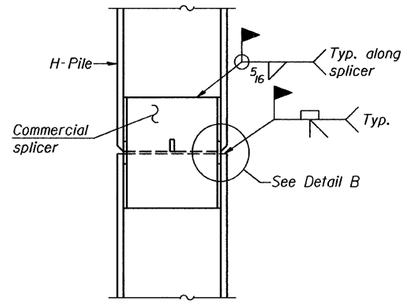

ELEVATION

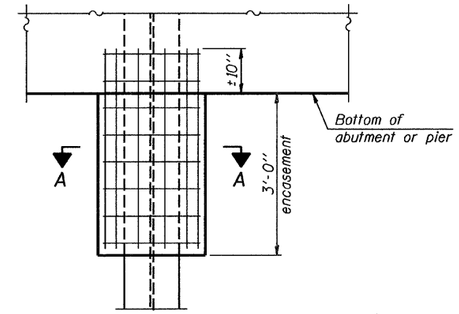

ELEVATION

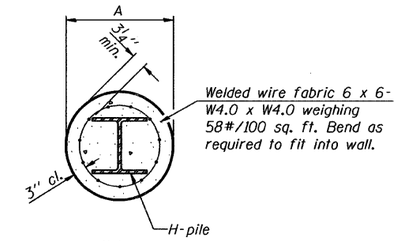

Note:
Forms for encasement may be omitted when soil conditions permit.

SECTION A-A

PILE ENCASEMENT

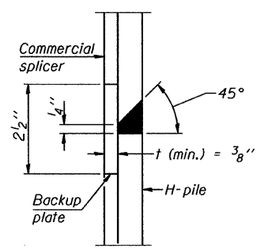

DETAIL "B"

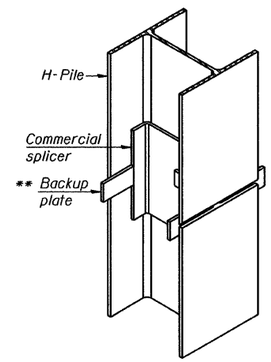

ISOMETRIC VIEW

WELDED COMMERCIAL SPLICE

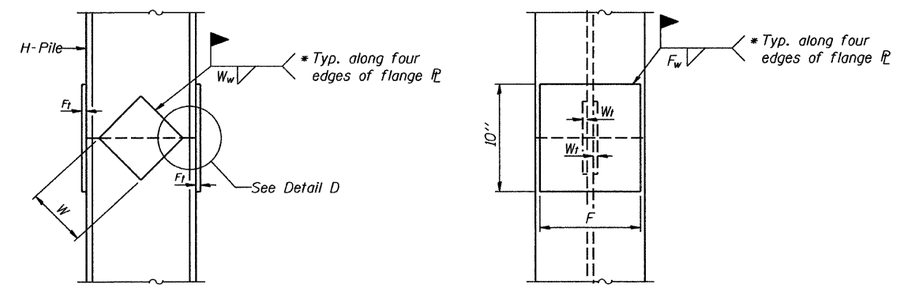

ELEVATION

END VIEW

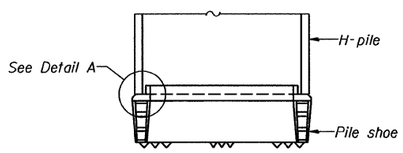

ELEVATION

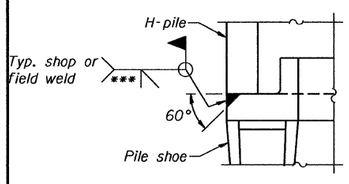

DETAIL A

H-PILE SHOE ATTACHMENT

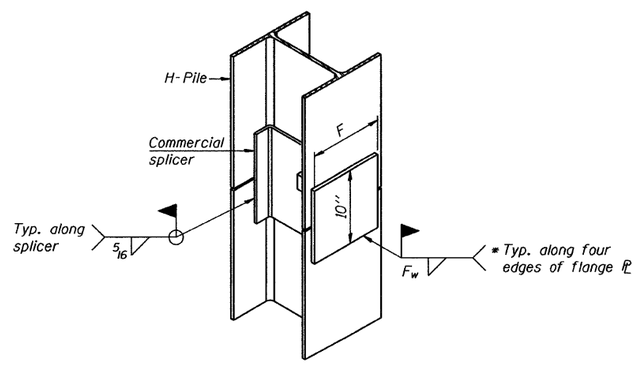

ISOMETRIC VIEW

WELDED COMMERCIAL SPLICE ALTERNATE

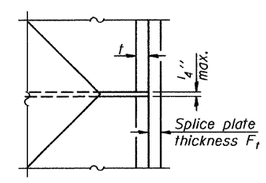

DETAIL D

Designation	F	F_f	F_w	W	W_f	W_w
HP 14x117	12 1/2"	1"	7/8"	7 3/4"	5/8"	1/2"
x102	12 1/2"	7/8"	3/4"	7 3/4"	5/8"	1/2"
x89	12 1/2"	3/4"	11/16"	7 3/4"	5/8"	1/2"
x73	12 1/2"	5/8"	9/16"	7 3/4"	5/8"	1/2"
HP 12x84	10"	7/8"	11/16"	6 1/2"	5/8"	1/2"
x74	10"	7/8"	11/16"	6 1/2"	5/8"	1/2"
x63	10"	5/8"	1/2"	6 1/2"	1/2"	3/8"
x53	10"	5/8"	1/2"	6 1/2"	1/2"	3/8"
HP 10x57	8"	3/4"	9/16"	5 1/4"	1/2"	3/8"
x42	8"	5/8"	9/16"	5 1/4"	1/2"	3/8"
HP 8x36	7"	5/8"	7/16"	4 1/4"	1/2"	3/8"

WELDED PLATE FIELD SPLICE

* Interrupt welds 1/4" from end of web and/or each flange.

** Remove portions of backup plates that extend outside the flanges.

*** Weld size per pile shoe manufacturer (5/16" min.).

Note:
The steel H-piles shall be according to AASHTO M270 Grade 50.

GRAEF 8501 W. Higgins Road; Suite 280 Chicago, Illinois 60631 (773) 399-0112

HP PILES

Illinois Rte. 84 Over Duke Creek

STATION 336+42.00 STRUCTURE NO. 043-0079

SHEET NO. SB18 OF 23 SHEETS	F.A.P. RTE.	SECTION	COUNTY	TOTAL SHEETS	SHEET NO.
	308	103BR-3	JO DAVIESS	126	79
			CONTRACT NO. 64B26		
	10-15-2010	ILLINOIS	FED. AID PROJECT		

DESIGNED	J.Z.
CHECKED	E.E.J.
DRAWN	R.B.H.
CHECKED	E.E.J.

F-HP 11-1-09

h:\jobs2010\2010301\cad\structural\dgn\00\SB18_HP_PILES.dgn
10/12/2010