Notes:
See sheet 15 of 29 for Sections C-C & D-D and View E-E.
a_4(E) and a_5(E) bar spacings measured along ℄ Rdwy.

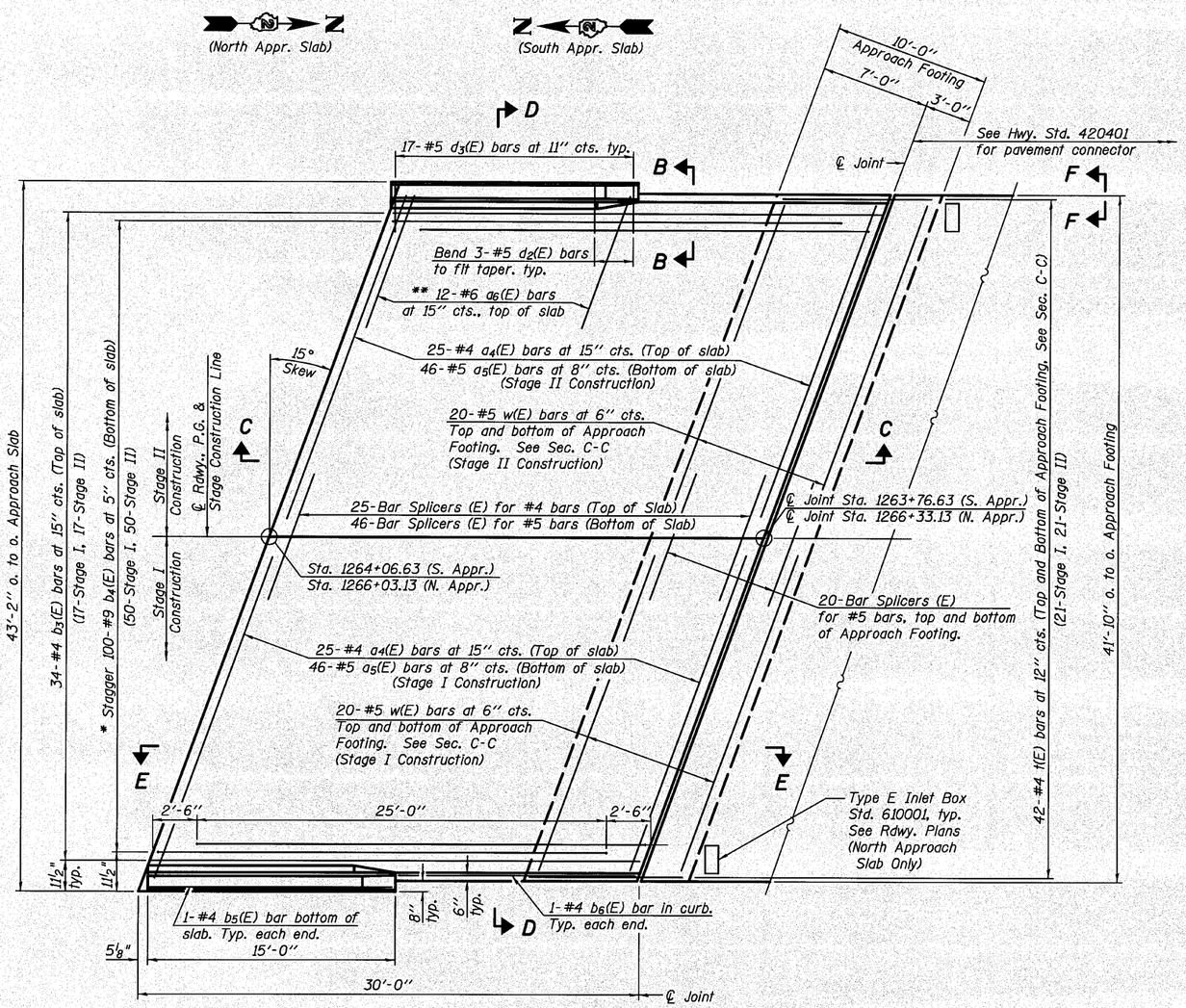

PLAN

* Tilt #9 b_4(E) bars as required to maintain clearance.
** Space between a_4(E) bars, typ. each parapet.

*** Cost included with Concrete Superstructure.

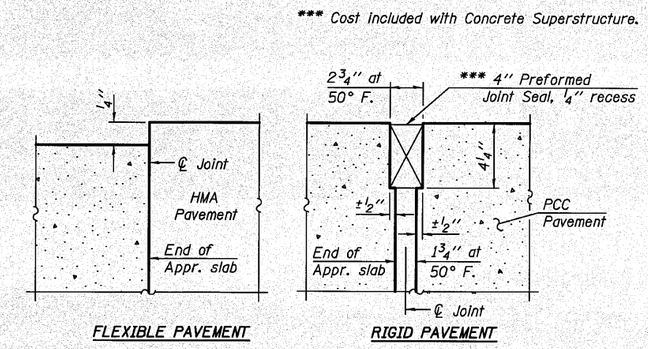

FLEXIBLE PAVEMENT

RIGID PAVEMENT

DETAIL A

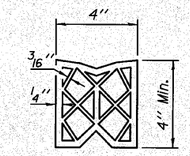

PREFORMED JOINT SEAL

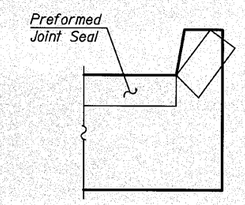

VIEW F-F

Angle Preformed Joint Seal at 45° at curbs when req'd for drainage.

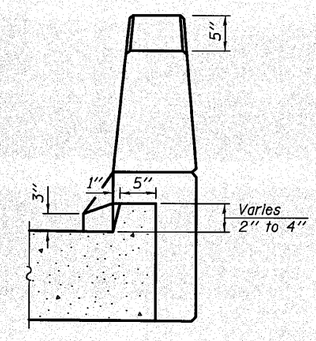

VIEW B-B

Wight	DESIGNED - MWS	REVISED -	STATE OF ILLINOIS DEPARTMENT OF TRANSPORTATION
	CHECKED - BJM	REVISED -	
	DRAWN - MWS	REVISED -	
PLOT DATE = 11/22/2018	CHECKED - BJM	REVISED -	

BRIDGE APPROACH SLAB DETAILS
STRUCTURE NO. 037-0176
SHEET NO. 14 OF 29 SHEETS

F.A.P. RTE.	SECTION	COUNTY	TOTAL SHEETS	SHEET NO.
638	129BR-4	HENRY	93	35
		CONTRACT NO. 64D25		
		ILLINOIS FED. AID PROJECT		

11/22/2018 10:07:02 AM G:\ENG\05-6798-14A D2 Bridges Phase 2\ILB2\CAD\Structures\Sht\B37B176_64D25_013_BridgeApproachSlabDetail.dgn