Notes:
Pour steps monolithically with cap.

STATE OF ILLINOIS
DEPARTMENT OF TRANSPORTATION

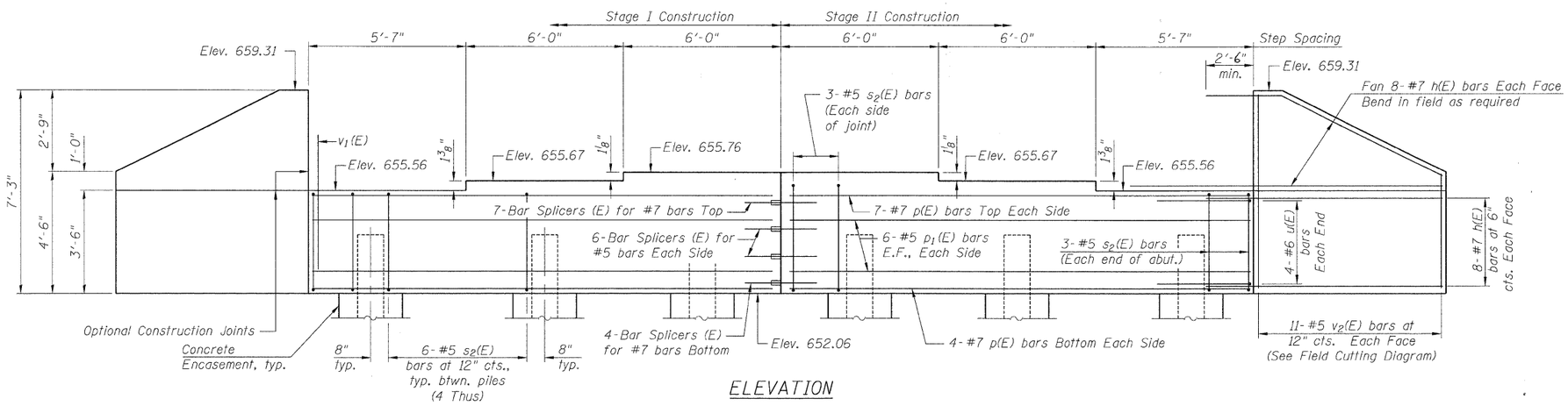

ELEVATION

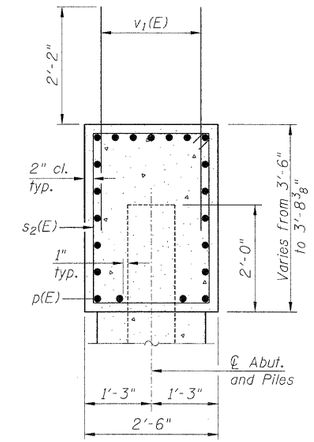

SEC. THRU ABUT.

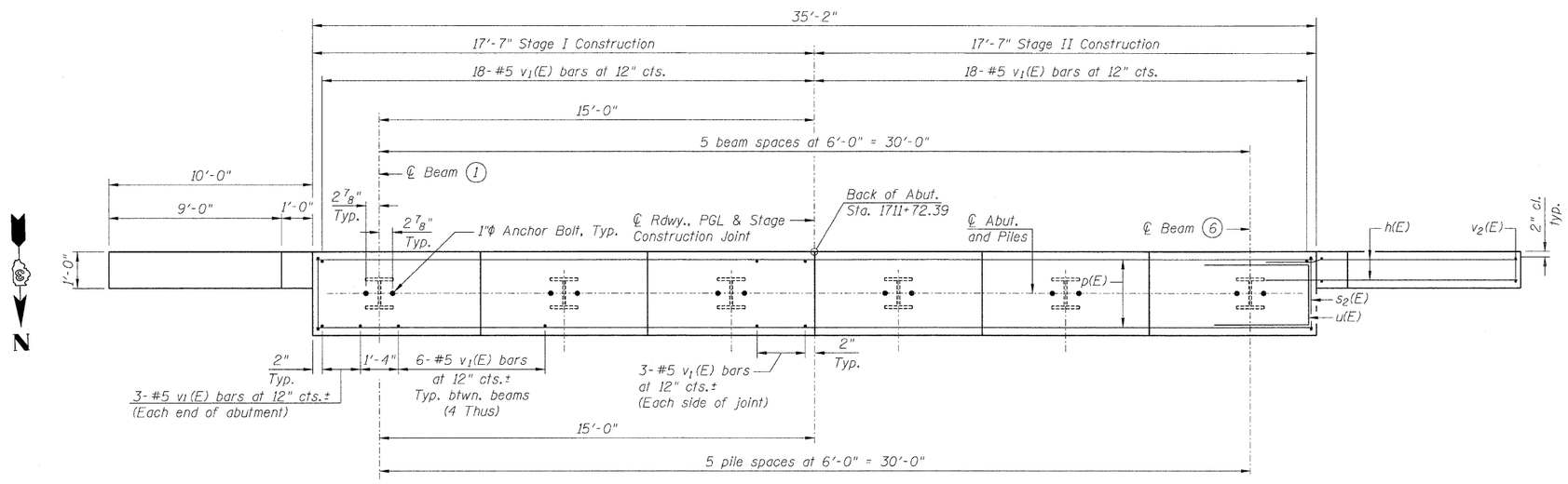

PLAN

BILL OF MATERIAL

Bar	No.	Size	Length	Shape
h(E)	64	#7	12'-11"	
p(E)	22	#7	17'-3"	
p1(E)	24	#5	17'-3"	
s2(E)	36	#5	11'-7"	
u(E)	8	#6	10'-11"	
v1(E)	72	#5	4'-4"	
v2(E)	22	#5	11'-0"	
Structure Excavation			Cu. Yd.	70
Concrete Structures			Cu. Yd.	16.2
Reinforcement Bars, Epoxy Coated			Pound	4,480
Furnishing Steel Piles, HP12x53			Foot	110
Driving Piles			Foot	110
Test Pile, HP12x53			Each	1
Concrete Encasement			Cu. Yd.	2.0

For details of Bar Splicers, see sheet 17 of 21.
For details of piles and Concrete Encasement, see sheet 18 of 21.
Space reinforcement in cap to miss anchor bolts.

PILE DATA

Type: Steel HP12x53
Nominal Required Bearing: 264k
Factored Resistance Available: 145k
Est. Length: 22'
No. Production Piles: 5
No. Test Piles: 1

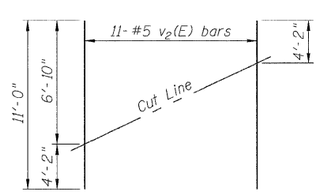

FIELD CUTTING DIAGRAM

Order v2(E) full length. Cut as shown and use remainder of bars in opposite face.

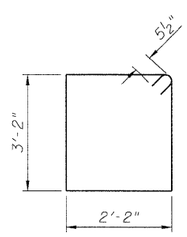

BAR s2(E)

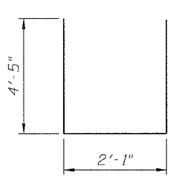

BAR u(E)

SOUTH ABUTMENT
STRUCTURE NO. 027-0099

ZROKA engineering
Zroka Engineering, P.C.
4216 North Hermitage
Chicago, IL 60613

DESIGNED	LAS
CHECKED	JLA
DRAWN	SAW
CHECKED	LAS

AI-0 11-1-09

SHEET NO. 16 OF 21 SHEETS	F.A.P. RTE.	SECTION	COUNTY	TOTAL SHEETS	SHEET NO.
	796	(106)BR-3	FORD	48	27
	SN 027-0099		CONTRACT NO. 66916		
	FED. ROAD DIST. NO. _	ILLINOIS	FED. AID PROJECT		

10/6/2010 8:09:58 PM C:\Drawings\5700-10\IL115\66916-016 SAbut.dgn