STATE OF ILLINOIS
DEPARTMENT OF TRANSPORTATION

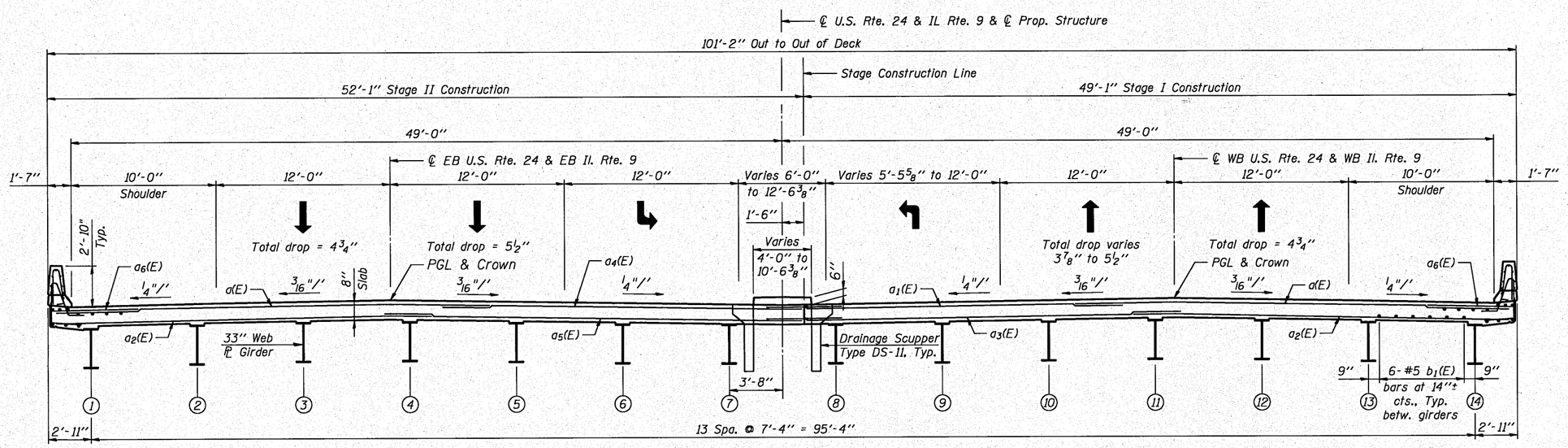

CROSS SECTION

(Looking West)

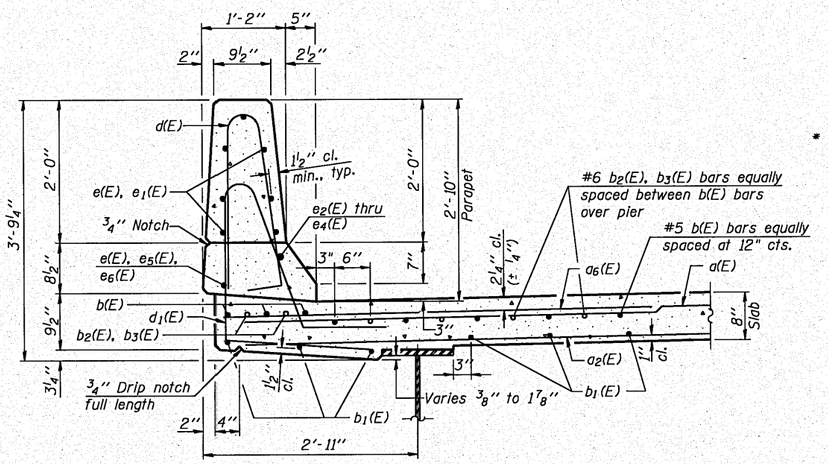

SECTION THRU PARAPET

* The cost of expansion anchors/inserts is included in the cost of Reinforcement Bars, Epoxy Coated.

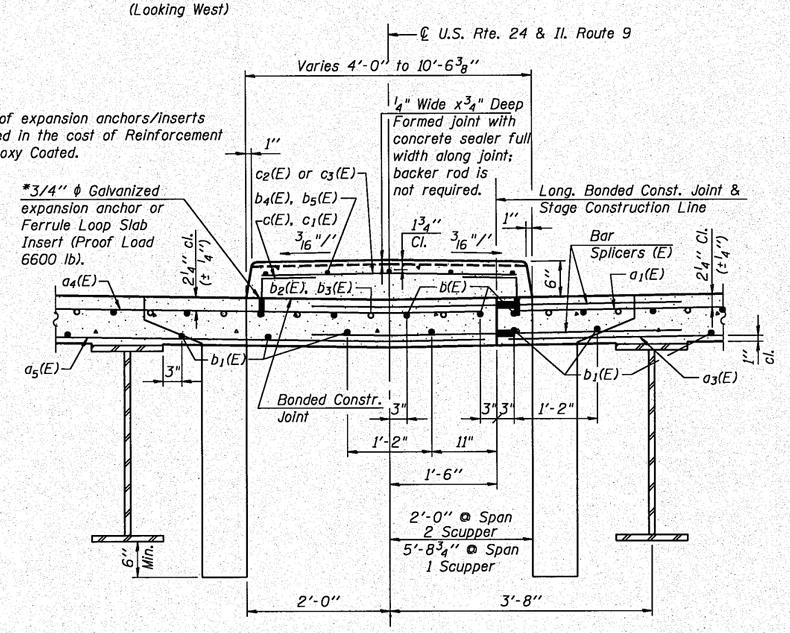

SECTION THRU MEDIAN

(Looking West)

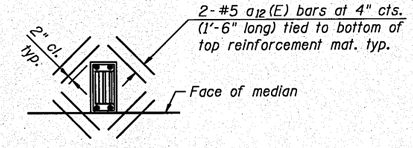

DETAIL AT SCUPPER

(See Note 3)

MINIMUM BAR LAP

#5 bar = 3'-3"
#6 bar = 3'-1"

NOTES

1. See Sheet S16 of 39 for deck details, parapet reinforcement, and Bill of Material.
2. The raised Median is to be constructed in Stage III. See Sheet S3 of 39 for Construction Staging.
3. Cut longitudinal reinforcement to clear drainage scuppers.

DESIGNED	E.E.J.
CHECKED	J.J.G.
DRAWN	E.E.J.
CHECKED	J.J.G.

GRAEF 8501 W. Higgins Road; Suite 280 Chicago, Illinois 60631 (773) 399-0112

DECK CROSS SECTION

U.S. ROUTE 24 & IL ROUTE 9 OVER LA MARSH CREEK

STATION 337+89.89 STRUCTURE NO. 072-0228

SHEET NO. S15 OF 39 SHEETS	F.A.P. RTE.	SECTION	COUNTY	TOTAL SHEETS	SHEET NO.
	317	45BR-2	PEORIA	122	63
			CONTRACT NO. 68719		
	10-15-10	ILLINOIS	FED. AID PROJECT		

h:\jobs2010\2010030014\cad\idot_structural\dgn\00\S15_DECK_CROSS_SECTION.dgn
10/18/2010