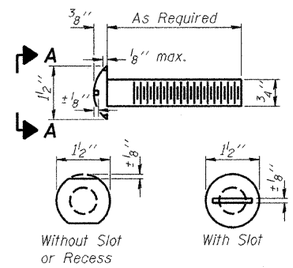

VIEW A-A
ROUND HEAD BOLT

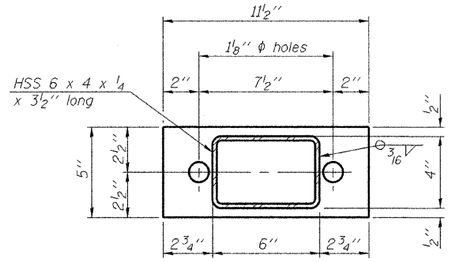

PL 1/2" x 11 1/2" x 5"

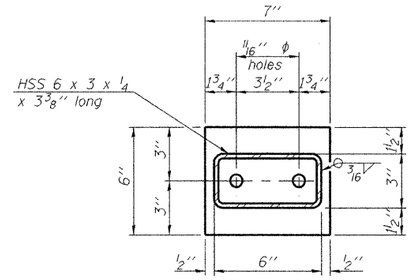

PL 1/2" x 7" x 6"

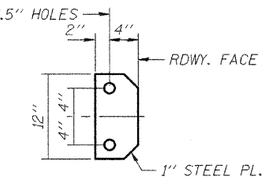

VIEW D-D

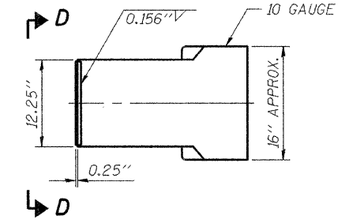

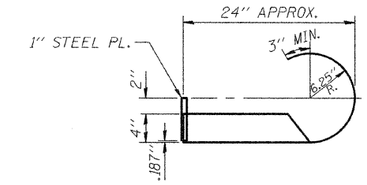

CURLED END SECTION DETAILS

4 REQUIRED - COST INCLUDED IN "STEEL RAILING, TYPE S-1"

Notes:

All field drilled holes shall be coated with an approved zinc rich paint before erection.

For multi-span bridges, sufficient 1/4" x 6" x 1'-2" galvanized steel shims shall be provided to align rail between adjacent spans. Cost included with Steel Railing, Type S-1.

All steel rail elements shall be galvanized according to Article 509.05 of the Standard Specifications.

*** The studs of the anchor devices shall be placed below the top reinforcement bars and the outermost longitudinal reinforcement bar shall be placed directly above the studs of the rail post anchor device.

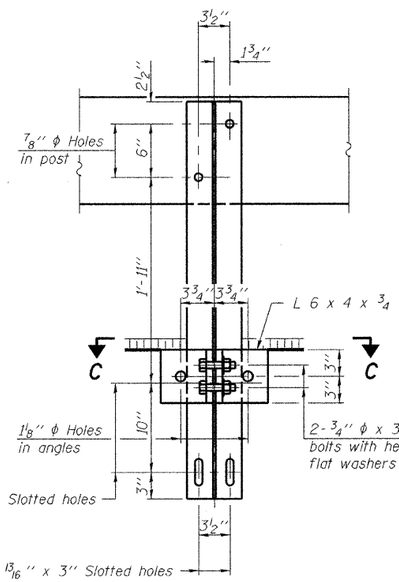

SECTION B-B

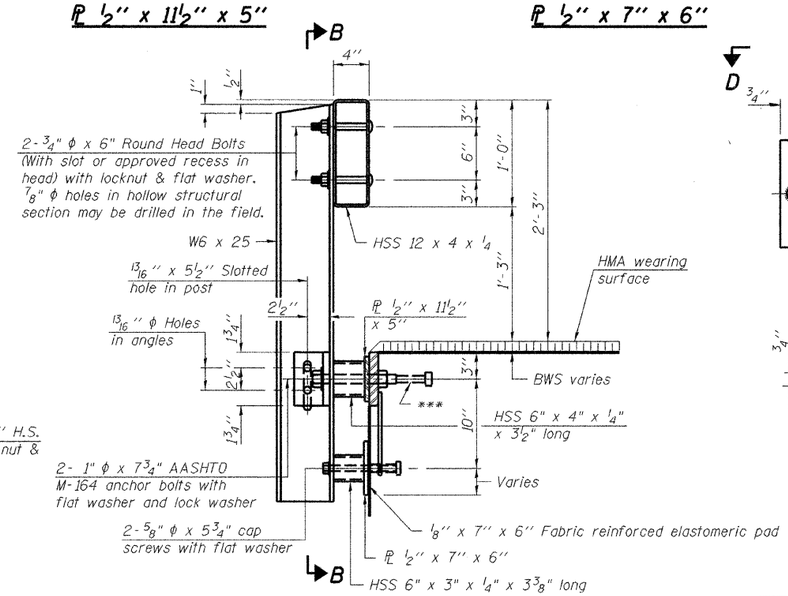

SECTION AT RAILING POST

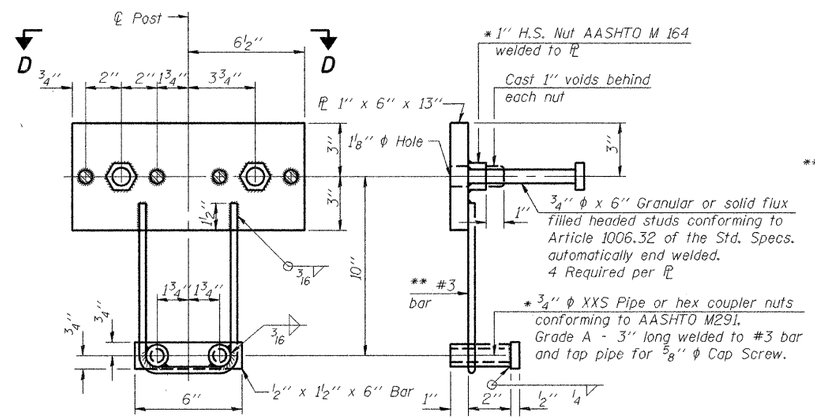

ANCHOR DEVICE

* Threaded areas shall be plugged or blocked off during casting of beam.

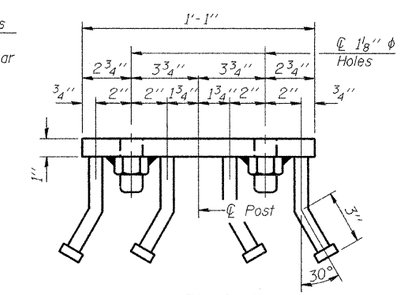

VIEW D-D

** Whenever the lower insert assemblies interfere with strand locations, the #3 bars shall be cut and adjusted in order to allow raising or lowering of the lower inserts. Maximum adjustment not to exceed 1/2".

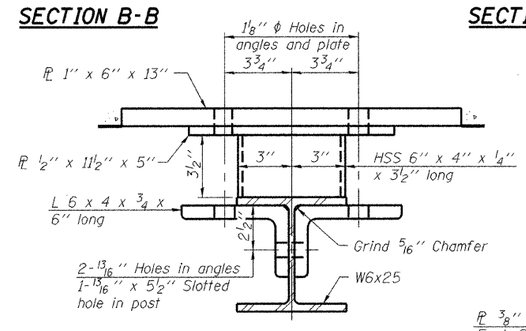

SECTION C-C

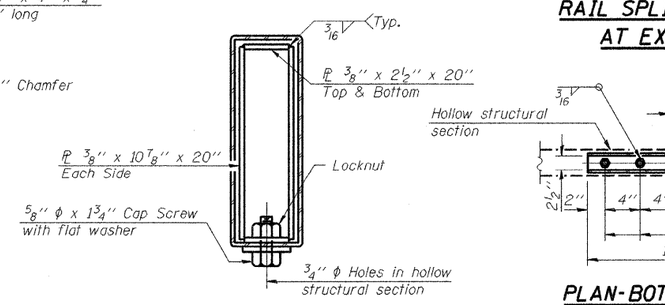

SECTIONS AT RAIL SPLICE

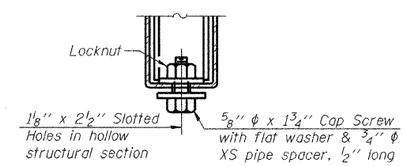

RAIL SPLICE CONNECTION AT EXPANSION JT.

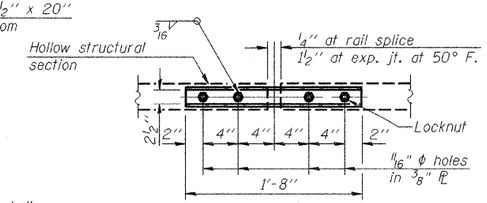

PLAN-BOTT. SPLICE PL TYPICAL

1 1/8" ϕ Holes for 1" ϕ x 4" Round head bolts. Provide 2 flat washers & locknuts for guard rail connection shown on Hwy. Std. 631026 or BLR 27-1.

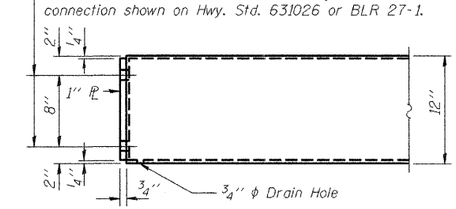

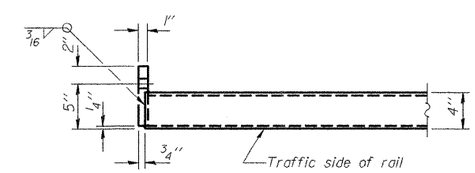

END OF RAIL DETAILS

BILL OF MATERIAL

Item	Unit	Quantity
Steel Railing, Type S-1	Foot	120

STEEL RAILING, TYPE S-1
STRUCTURE NO. 092-3518

DATE: 09-20-2010 DRAWN BY: JEH CHECKED BY: DF

SHEET NO. 4 OF 8 SHEETS	T.R.	SECTION	COUNTY	TOTAL SHEETS	SHEET NO.
	160	09-09123-00-BR	VERMILION	19	10
			CONTRACT NO. 91437		
	FED. ROAD DIST. NO. _	ILLINOIS	FED. AID PROJECT		

ESI CONSULTANTS, LTD
763 WINDSOR ROAD
CHARLESTON, IL 61920
(217) 348-1920
WWW.ESICONSULTANTSLTD.COM
ILLINOIS DEPARTMENT OF PROFESSIONAL REGULATION REGISTRATION #184-003685

R-23A 11-1-09 (10'-9" Maximum Post Spacing)

PRINTED DATE: 10/27/2010
FILE NAME = N:\Projects\Vermilion_County_of\18-348_TR 160 - Swank Cr\CADD\Drawings\Sheets\18_TR 160_Rail.dgn