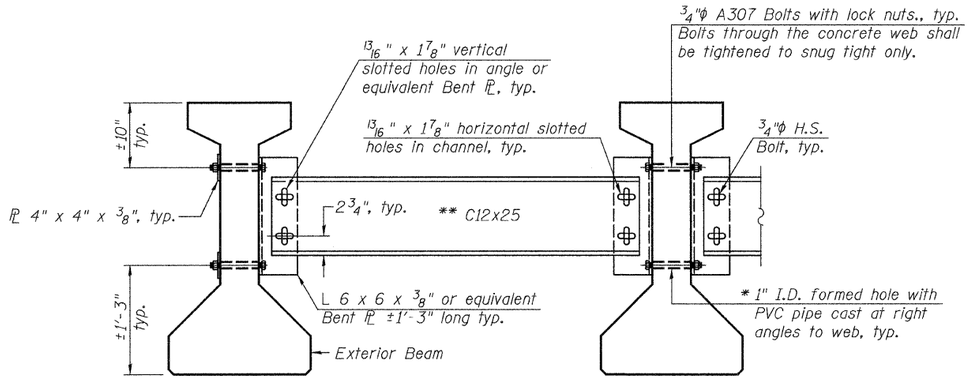

Notes:

All material for bracing shall be hot dip galvanized according to AASHTO M111 unless otherwise noted.

Two hardened washers are required for each set of oversized holes.

All holes shall be 15/16"φ unless otherwise noted.

5/16" x 3" x 3" plate washers are required over all slotted holes.

All bolts shall be galvanized according to AASHTO M232.

Bracing shall be installed as beams are erected and tightened as soon as possible during erection.

* Fabricator shall locate to miss strands within permissible tolerances.

** Alternate C12x30 channels are permitted to facilitate material acquisition. Calculated weight of structural steel is based on lighter section. The alternate, if utilized, shall be provided at no extra cost to the Department.

PERMANENT BRACING DETAILS

Permanent bracing shall not be paid for separately but shall be included with Furnishing and Erecting Precast Prestressed I-Beams, 36".

INTERIOR BEAM REACTION TABLE				
		Abut.	Pier 1 Span 1 Pier 2 Span 3	Pier 1 Span 2 Pier 2 Span 2
	R_{DC1} (k)	25.2	25.2	25.2
*	R_{DC2} (k)	0.6	0.8	0.8
*	R_{DW} (k)	6.4	8.8	8.8
*	R_{LL+IM} (k)	61.1	50.3	50.3
	R_{Total} (k)	93.3	85.1	85.1

* The total R_{DC2}, R_{DW} and R_{LL+IM} are assumed to be distributed evenly to each bearing line at a pier regardless of the span ratios. The bearing design at a pier is based on the maximum reactions of either span.

I: Non-composite moment of inertia of beam section (in.^{4}).
I': Composite moment of inertia of beam section (in.^{4}).
S_b: Non-composite section modulus for the bottom fiber of the prestressed beam (in.^{3}).
S_b': Composite section modulus for the bottom fiber of the prestressed beam (in.^{3}).
S_t: Non-composite section modulus for the top fiber of the prestressed beam (in.^{3}).
S_t': Composite section modulus for the top fiber of the prestressed beam (in.^{3}).
DC1: Un-factored non-composite dead load (kips/ft.).
M_{DC1}: Un-factored moment due to non-composite dead load (kip-ft.).
DC2: Un-factored long-term composite (superimposed excluding future wearing surface) dead load (kips/ft.).
M_{DC2}: Un-factored moment due to long-term composite (superimposed excluding future wearing surface) dead load (kip-ft.).
DW: Un-factored long-term composite (superimposed future wearing surface only) dead load (kips/ft.).
M_{DW}: Un-factored moment due to long-term composite (superimposed future wearing surface only) dead load (kip-ft).
M_{LL+IM}: Un-factored live load moment plus dynamic load allowance (impact) (kip-ft.).

INTERIOR BEAM MOMENT TABLE				
		0.4 Sp. 1 0.6 Sp. 3	Pier 1 or 2	0.5 Sp. 2
I	(in^4)	48,648	-	48,648
I'	(in^4)	173,998	-	173,998
S_b	(in^3)	3,165	-	3,165
S_b'	(in^3)	5,930	-	5,930
S_t	(in^3)	2,358	-	2,358
S_t'	(in^3)	26,125	-	26,125
DC1	(k/')	1.04	-	1.04
M_{DC1}	('k)	276	-	287
DC2	(k/')	0.03	0.03	0.03
M_{DC2}	('k)	6	7	2
DW	(k/')	0.33	0.33	0.33
M_{DW}	('k)	61	77	20
M_{LL+IM}	('k)	528	384	420

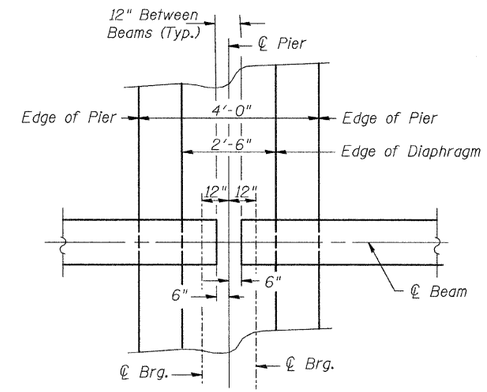

DETAIL A
(Typical @ Piers)

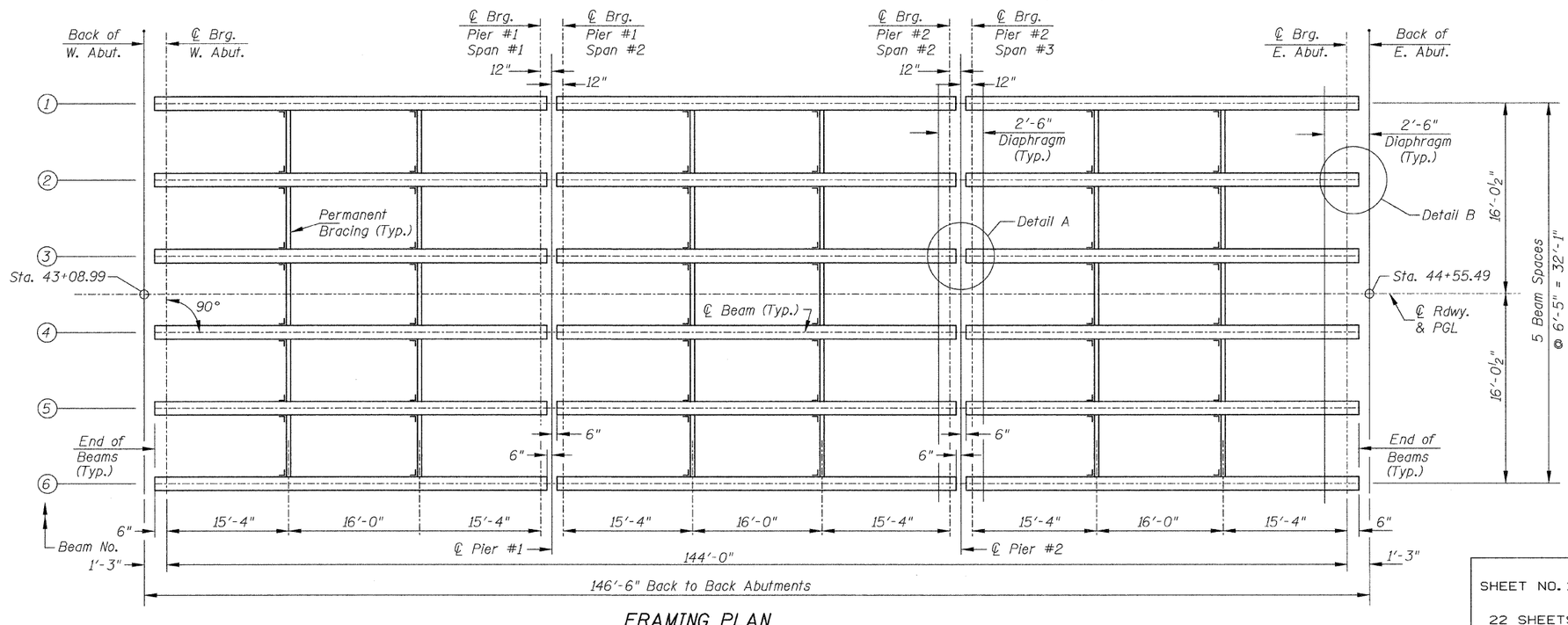

FRAMING PLAN

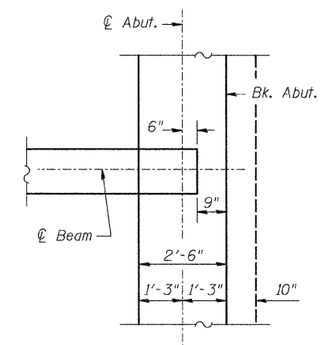

DETAIL B
(Typical @ Abutments)

FRAMING PLAN
C.H. 12 OVER JOES CREEK
SECTION 07-00090-00-BR
MACOUPIN COUNTY

SHEET NO. 12	ROUTE NO.	SECTION	COUNTY	TOTAL SHEETS	SHEET NO.
	CH 12	07-00090-00-BR	MACOUPIN	77	41
22 SHEETS	SN 059-3557		CONTRACT NO. 93538		
	FED. ROAD DIST. NO. 7	ILLINOIS	FED. AID PROJECT BRS-0732(148)		

2576-2B012