Notes:
Pour steps monolithically with cap.

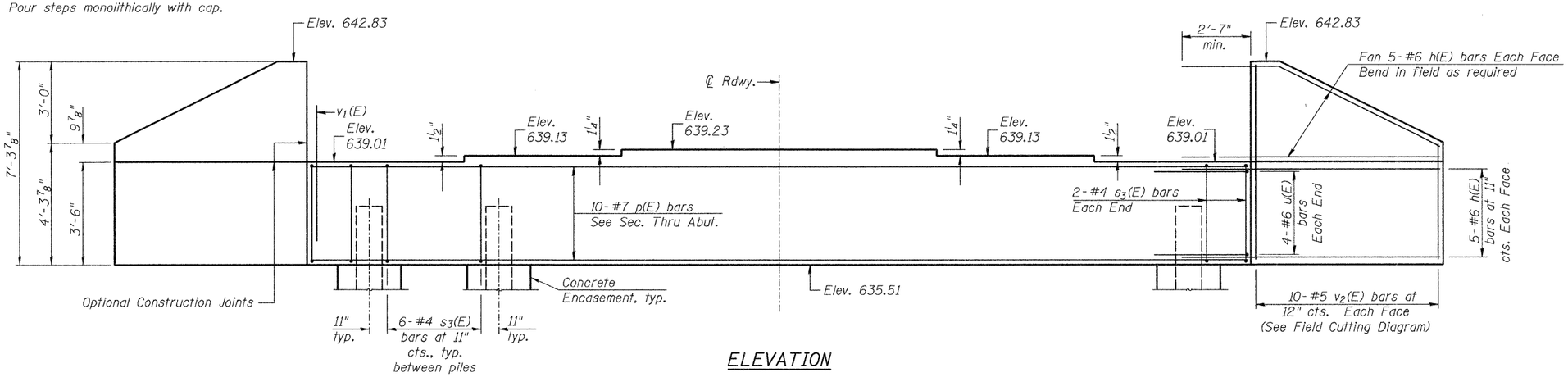

ELEVATION

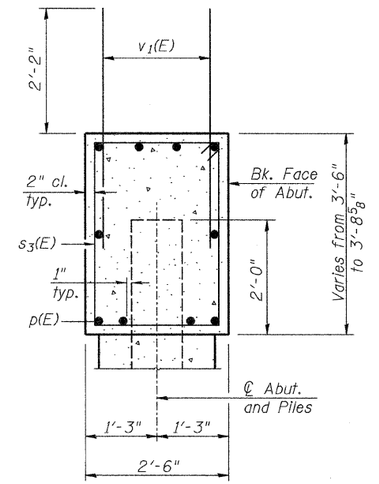

SEC. THRU ABUT.

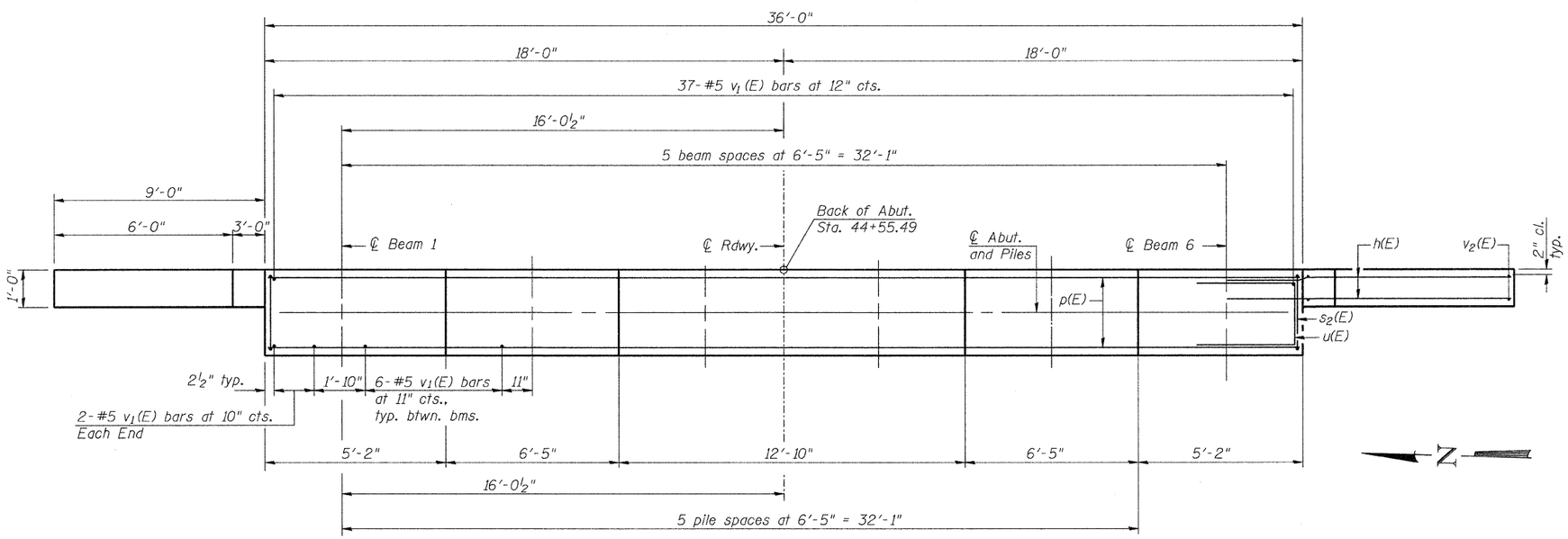

PLAN

EAST ABUTMENT BILL OF MATERIAL

	Bar	No.	Size	Length	Shape
	h(E)	40	#6	11'-6"	
	p(E)	10	#7	35'-8"	
	s3(E)	34	#4	11'-5"	
	u(E)	8	#6	10'-1"	
	v1(E)	71	#5	4'-4"	
	v2(E)	20	#5	11'-0"	
	Structure Excavation			Cu. Yd.	70
	Concrete Structures			Cu. Yd.	16.3
①	Reinforcement Bars, Epoxy Coated			Pound	2,350
	Furnishing Steel Piles HP12x53			Foot	325
①	Driving Piles			Foot	325
①	Test Pile Steel HP12x53			Each	1
	Concrete Encasement			Cu. Yd.	2.1

① See Special Provisions

For details of Piles and Concrete Encasement, see sheet 20 of 22.

PILE DATA

Type: HP12x53
Nominal Required Bearing: 290 Kips
Factored Resistance Available: 145 Kips
Est. Length: 65'
No. Production Piles: 5
No. Test Piles: 1

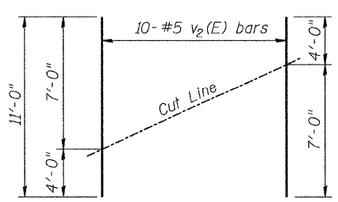

FIELD CUTTING DIAGRAM

Order v2(E) full length. Cut as shown and use remainder of bars in opposite face.

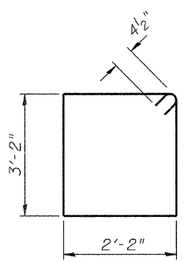

BAR s3(E)

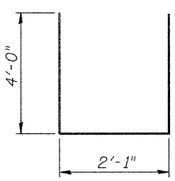

BAR u(E)

EAST ABUTMENT
C.H. 12 OVER JOES CREEK
SECTION 07-00090-00-BR
MACOUPIN COUNTY

SHEET NO. 16	ROUTE NO.	SECTION	COUNTY	TOTAL SHEETS	SHEET NO.
22 SHEETS	CH 12	07-00090-00-BR	MACOUPIN	77	45
		SN 059-3557	CONTRACT NO. 93538		
	FED. ROAD DIST. NO. 7	ILLINOIS	FED. AID PROJECT BRS-0732(148)		

2576-2B016