STANDARD DRAINAGE STRUCTURES FOR PUBLIC STREETS

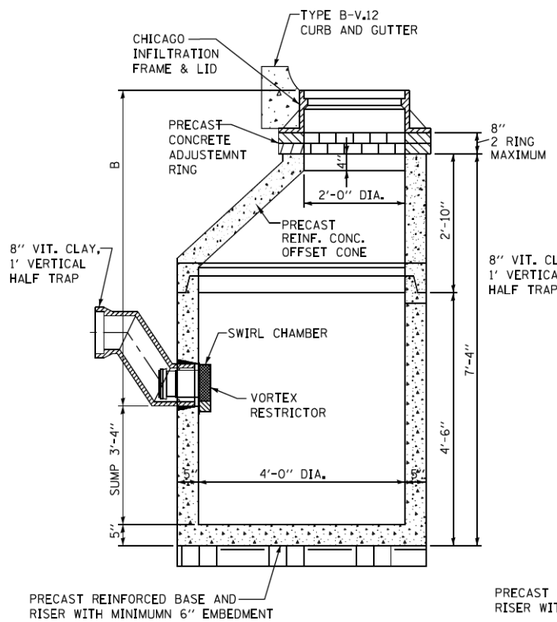

STANDARD CATCH BASIN-4' DIA.

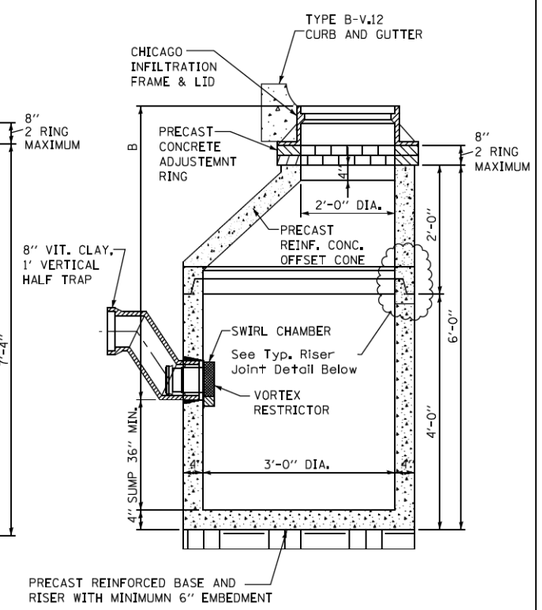

STANDARD CATCH BASIN-3' DIA.

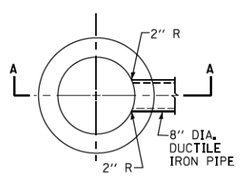

PLAN
(FRAME & LID NOT SHOWN)

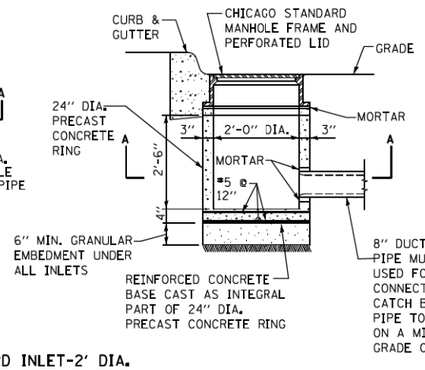

STANDARD INLET-2' DIA.

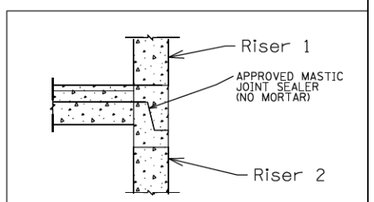

Riser Joint Detail (Typ.)

NOTES:

1. FOR ANY DRAIN TILE CONNECTION, THE WATER TABLE MUST BE AT LEAST 3.5 FEET BELOW ELEVATION A.

2. PVC UNDERDRAINS MUST BE 4" MINIUMUM DIAMETER, (6" RECOMMENDED) AND MUST BE WRAPPED IN GEOTECH FABRIC.

NOTE:
INLETS AND 3' DIAMETER CATCH BASINS ARE TO BE USED ONLY WITH PRIOR APPROVAL OF DWM SEWER ENGINEER OR FIELD INSPECTOR.

STANDARD DRAINAGE STRUCTURES FOR PUBLIC ALLEYS

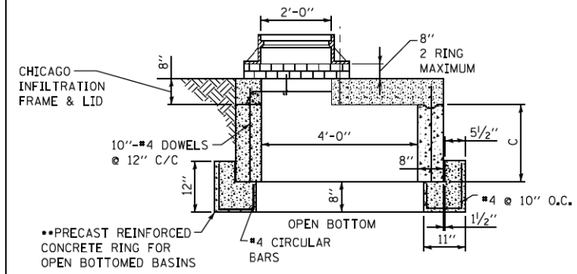

GREEN ALLEY OPEN BOTTOM CATCH BASIN

TO BE USED IF STANDARD CONE WITH REQUIRED SUMP DEPTH INSTALLATION IS IMPOSSIBLE.

**IF FLAT TOP SLAB CATCH BASIN IS USED IN AN OPEN BOTTOM APPLICATION, THE FOLLOWING CRITERIA MUST BE FOLLOWED:

-"C" MUST BE A MINIMUM OF 3 FEET.

- PROVIDE A MINIMUM AGGREGATE BASE OF 1.0 FEET BELOW PRECAST REINFORCED CONCRETE RING.

-GEOTECH FABRIC MUST BE PLACED ON SIDES AND BOTTOM OF AGGREGATE SURROUNDING BASIN.

-AGGREGATE BASE MUST PROVIDE ADEQUATE STORMWATER STORAGE CAPACITY PER THE APPROVED/PERMITTED PLANS.

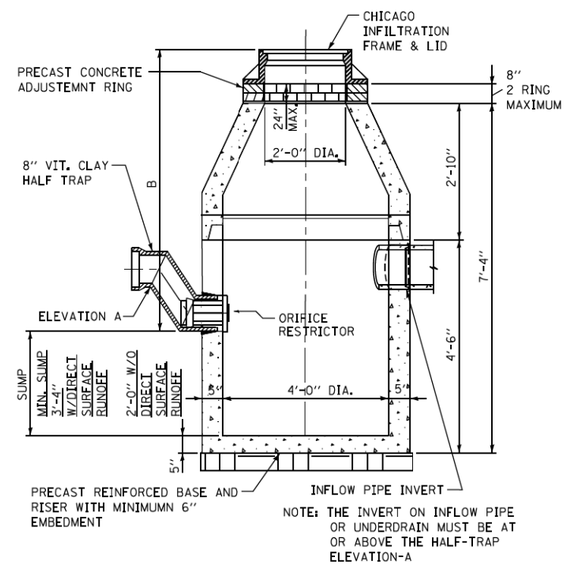

CATCH BASIN-ORIFICE RESTRICTOR

N.T.S.

DRAINAGE STRUCTURES RESTRICTORS

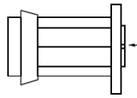

INSERT THE RESTRICTOR INTO THE HALF-TRAP. UPON TIGHTENING OF THE CENTER NUT ON THE FACE OF THE RESTRICTOR, THE RUBBER O-RINGS WILL EXPAND INSIDE THE HALF TRAP, PROVIDING A WATER- TIGHT SEAL. PULL ON RESTRICTOR TO VERIFY THAT A TIGHT FIT IS MADE.

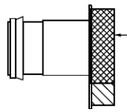

PULL ON RESTRICTOR TO VERIFY THAT A TIGHT FIT IS MADE.

INSERT THE RESTRICTOR WITH THE OPENING DOWN. UPON TIGHTENING OF THE 2 BOLTS ON THE FACE OF THE RESTRICTOR, THE RUBBER O-RINGS WILL PROVIDE A WATER- TIGHT SEAL.

GENERAL NOTES:

1. CATCH BASIN TO CATCH BASIN CONNECTIONS ARE ALLOWED IN PRIVATE SITES & ALLEYS. ONLY THE DOWNSTREAM CATCH BASIN IS REQUIRED TO HAVE A HALF-TRAP.

2. IF B < 4 FEET, THEN USE A DUCTILE IRON PIPE HALF TRAP AND FLAT TOP SLAB CATCH BASIN AS NECESSARY.

3. INLETS AND 3' DIAMETER CATCH BASINS ARE TO BE USED ONLY
WITH PRIOR APPROVAL OF DWM FIELD INSPECTOR.

RESTRICTOR NOTES:

THE DWM'S RAIN BLOCKER RESTRICTOR PROGRAM MUST BE MAINTAINED WITH ANY ROADWAY IMPROVEMENT.

THE DESIGN OF ANY ROADWAY IMPROVEMENT MUST CONSIDER LIMITING THE NUMBER OF CATCH BASINS TO THE EXTENT PRACTICAL. THE NUMBER OF EXISTING STRUCTURES SHOULD NOT BE INCREASED.

THE RESTRICTORS CAN BE OBTAINED FROM DWM CENTRAL DISTRICT AT 3901 S. ASHLAND AVE. THE CONTRACTOR SHOULD ARRANGE FOR PICK UP BY CONTACTING 312-747-1177 (7AM TO 3PM, M-F)

FLOW RESTRICTORS MUST BE INSTALLED IN ALL CATCH BASINS OUTSIDE OF THE CENTRAL BUSINESS DISTRICT. RESTRICTORS MUST NOT BE INSTALLED IN CATCH BASINS IN CLOSE PROXIMITY TO VIADUCT AREAS, BUS STOPS, OR EMERGENCY ENTRANCES. THE DWM MUST APPROVE THE NON-INSTALLATION OR REMOVAL OF ANY RESTRICTOR. REQUIREMENTS FOR RESTRICTOR INSTALLATION ARE AS FOLLOWS:

•ARTERIAL STREETS: 3-INCH ORIFICE RESTRICTOR
•BUS ROUTES: 3-INCH ORIFICE RESTRICTOR
•RESIDENTIAL STREETS: 3-INCH VORTEX RESTRICTOR
•ALLEYS: 3-INCH ORIFICE RESTRICTOR IN THE LAST CB.
•CLOSED LIDS ARE REQUIRED ON ALL MANHOLES EXCEPT AT INTERSECTIONS WHERE A PERFORATED LID SHALL BE USED.

STANDARD REVISIONS	
DATE	DESCRIPTION
11/21/11	REVISED

PERCENT COMPLETE	DATE
30	
60	
75	
90	
100	
BULLETIN	

CITY OF CHICAGO
DEPARTMENT OF WATER MANAGEMENT
BUREAU OF ENGINEERING SERVICES

DRAINAGE STRUCTURE DETAILS

DRAWN: SDW
DESIGNED:
CHECKED:
REVIEWED:

A.16

OF

PN

$FILE$
8/9/2013

FILE PATH = pw:\\388839-pwint.eecomonline.local:PWAECOM00\Documents\01 Americas\Transportation\60269938 Circle\Phase.II\002.CAD\006.Roadway\Sheets\60W29_Contract\D160W29-Sht-CDWM-06.dgn

D160W29-Sht-CDWM-06.dgn	DESIGNED - CDWM	REVISED -
USER NAME = BAWtort	DRAWN - CDWM	REVISED -
PLOT SCALE = 2.0000 ' / in.	CHECKED - CDWM	REVISED -
PLOT DATE = 10/28/2013	DATE - 10/30/2013	REVISED -

STATE OF ILLINOIS
DEPARTMENT OF TRANSPORTATION

CITY OF CHICAGO – DEPARTMENT OF WATER MANAGEMENT
STANDARD DETAILS A.16

SCALE: NONE | SHEET 6 OF 6 SHEETS | STA. TO STA.

F.A.I. RTE.	SECTION	COUNTY	TOTAL SHEETS	SHEET NO.
90/94/290	2013-011R	COOK	356	346

CONTRACT NO. 60W29

ILLINOIS FED. AID PROJECT