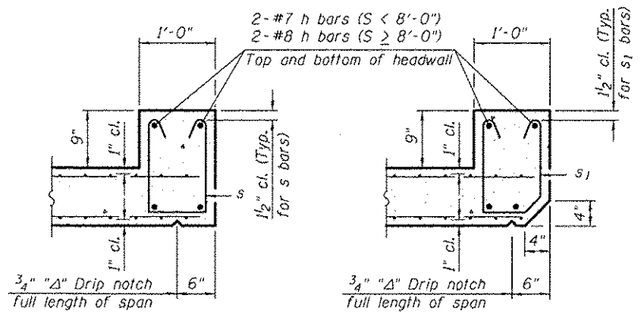

SECTION B-B
(Top slab at downstream end)

SECTION B-B
(Top slab at upstream end)

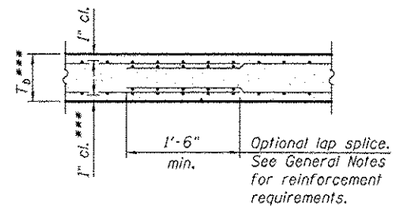

SECTION B-B
(Bottom Slab)

*** This dimension shall be increased by 2" for CIP construction.

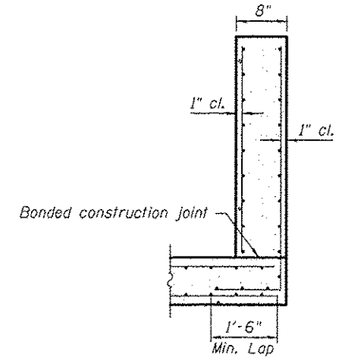

SECTION C-C

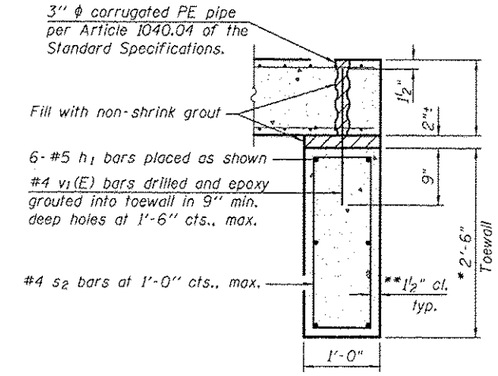

SECTION D-D

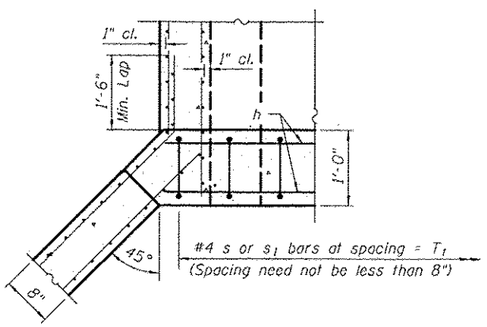

SECTION E-E

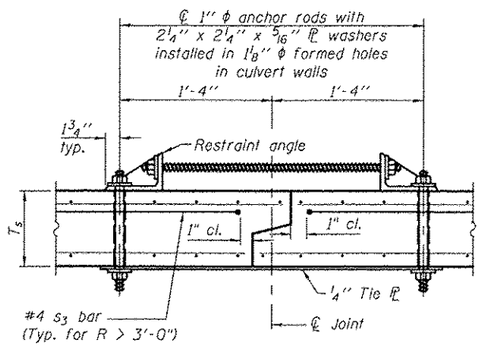

SECTION F-F
(Showing culvert tie details)

TOEWALL CONSTRUCTION SEQUENCE

1. Perform excavation and construct toewall.
2. Backfill accordingly and place bedding for precast box culvert end sections.
3. Set precast box culvert end section.
4. Drill and epoxy grout reinforcement in toewall in accordance with Section 584 of the Standard Specifications.
5. Pressure grout voids using non-shrink grout conforming to Section 1024 of the Standard Specifications.

* The Contractor may furnish a precast or cast-in-place toewall. The Contractor shall be responsible for the strength and stability of the precast toewall during handling. Additional lifting points may be required depending upon the length of the toewall or the Contractor may need to modify the design of the toewall for the proposed handling method.

** If soil conditions permit, the sides of the toewall may be poured directly against the soil. The clear cover on the sides of the toewall shall be increased to 3" by increasing the thickness of the toewall.

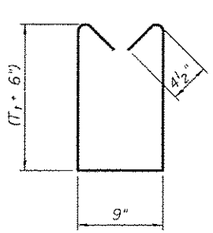

BAR s

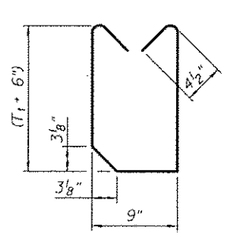

BAR s1

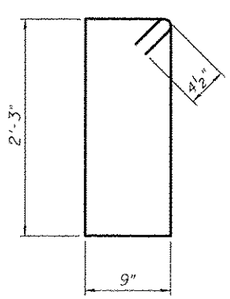

BAR s2

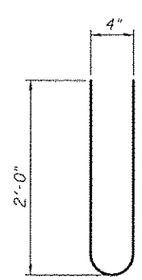

BAR s4

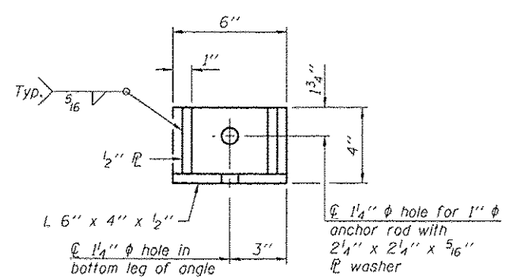

RESTRAINT ANGLE DETAIL

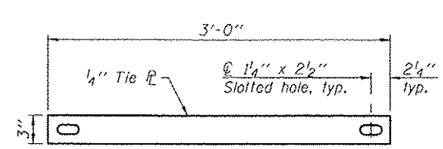

TIE PLATE DETAIL

Notes:

1" ϕ anchor rods for the culvert ties shall conform to the requirements of ASTM F1554, Grade 105. Structural steel for the tie plate and restraint angle shall conform to the requirements of Article 1006.04 of the Standard Specifications. All components of the culvert tie detail shall be galvanized according to the requirements of AASHTO M 111 or M 232 as applicable. 2¼"x2¼"x5/16" plate washers shall be provided under each nut required for the anchor rods. Anchor rods installed in the sidewalls of the culvert shall be tightened per Article 505.04(f)2(d) of the Standard Specifications. Holes in the walls for the culvert tie assembly may be drilled using core bits in lieu of using formed holes.

Alternate culvert ties similar in strength and stiffness to the plan details may be provided by the Contractor. Alternate culvert ties shall be subject to the approval of the Engineer.

FILE NAME = c:\pw_work\pwidot\cearlockjd\d0120316\D570663-sht-structures.dgn	USER NAME = cearlockjd	DESIGNED -	REVISED
		CHECKED -	REVISED
	PLOT SCALE = 40.0000 ' / in.	DRAWN -	REVISED
	PLOT DATE = 10/18/2013	CHECKED -	REVISED

STATE OF ILLINOIS
DEPARTMENT OF TRANSPORTATION

PRECAST CONCRETE BOX CULVERT
APRON END SECTION DETAILS

SHEET NO. 3 OF 5 SHEETS

F.A.U. RTE.	SECTION	COUNTY	TOTAL SHEETS	SHEET NO.
*	(2X,3)RS-3 & 2RS-4	Champiagn	551	200
* F.A.U. 7152 & F.A.S. 1512		CONTRACT NO. 70663		
		ILLINOIS FED. AID PROJECT		