DETAIL OF OUTLET (SPECIAL)

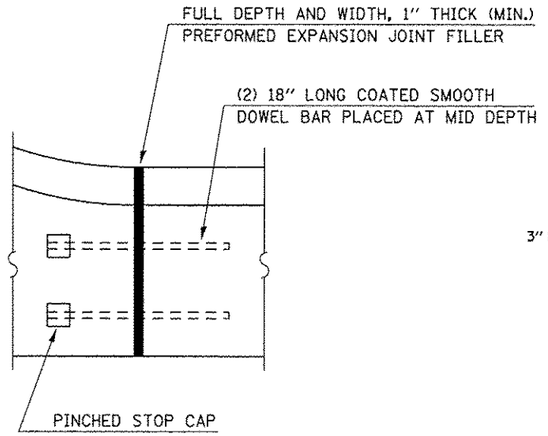

DETAIL OF EXPANSION JOINT

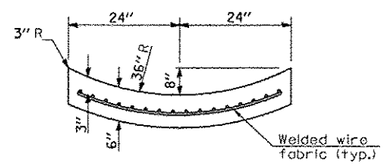

SECTION C-C

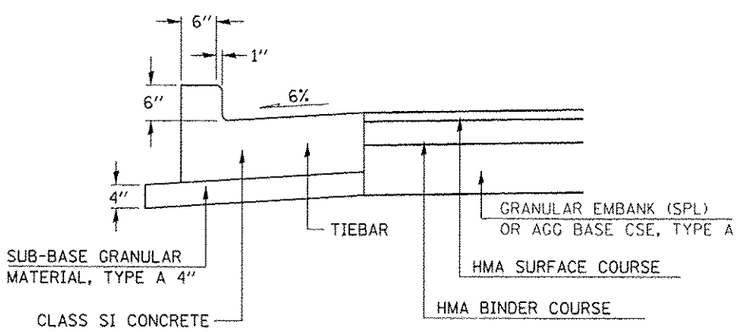

SECTION A-A

WHEN t=8" V=1.21 CU. YDS. CLASS SI CONCRETE + B-B
WHEN t=9" V=1.27 CU. YDS. CLASS SI CONCRETE + B-B
WHEN t=10" V=1.33 CU. YDS. CLASS SI CONCRETE + B-B
WHEN t=11" V=1.38 CU. YDS. CLASS SI CONCRETE + B-B

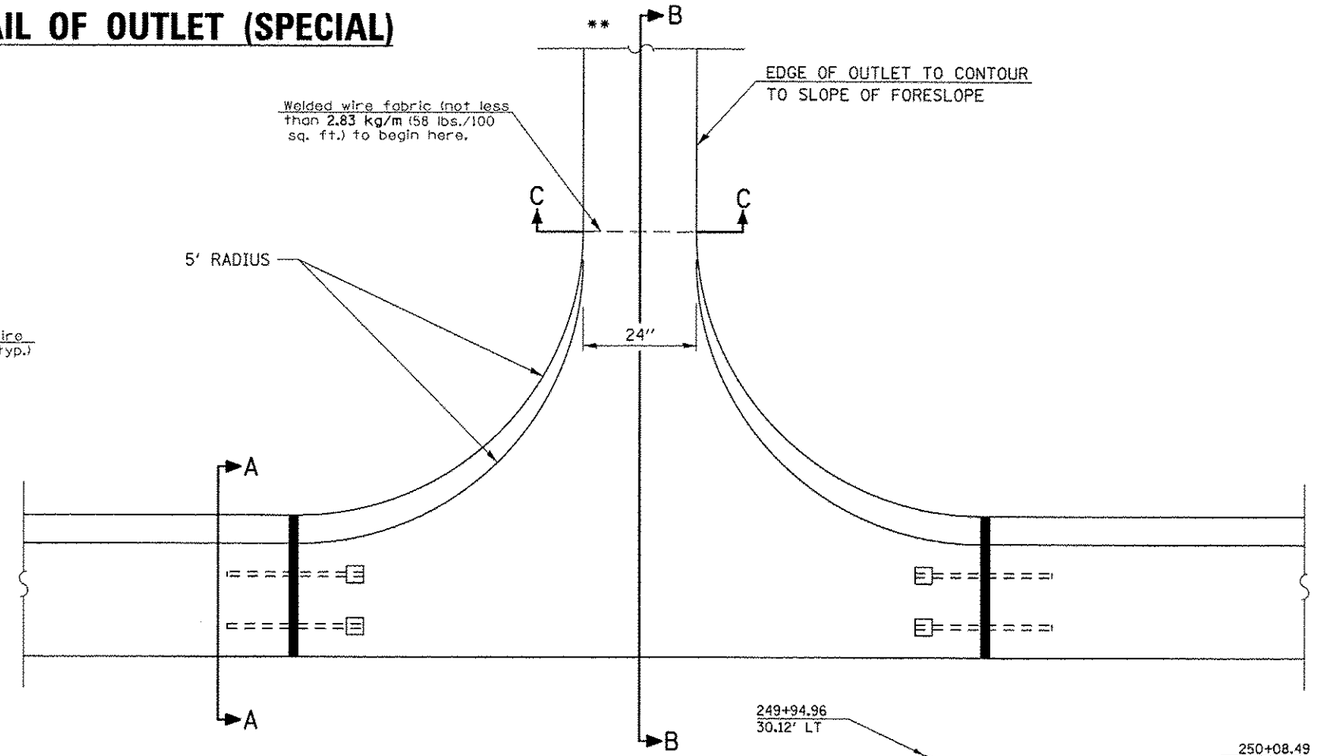

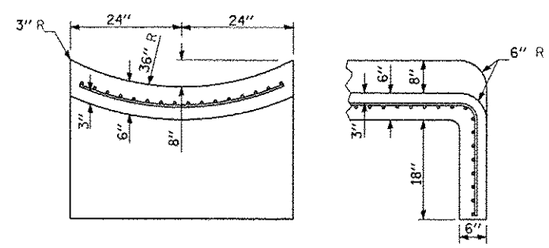

** SECTIONS AT END OF OUTLET

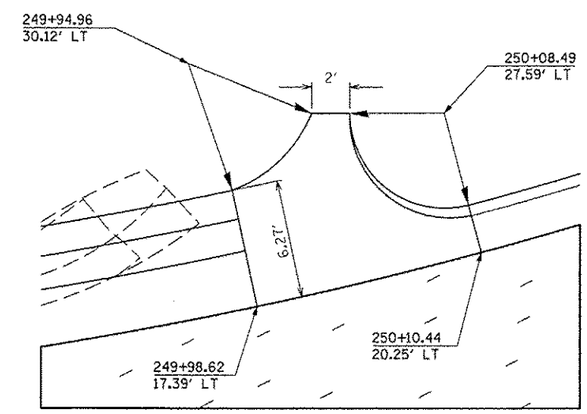

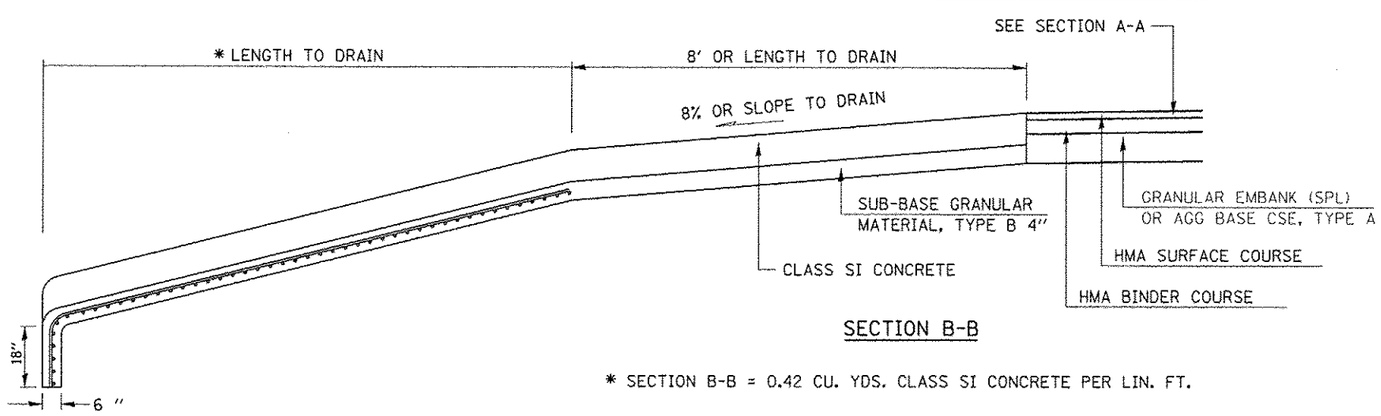

SECTION B-B

* SECTION B-B = 0.42 CU. YDS. CLASS SI CONCRETE PER LIN. FT.

GENERAL NOTES

1. CLASS SI CONCRETE SHALL BE USED THROUGHOUT.
2. TIE BARS SHALL BE NO. 6 (NO. 20) AT 24" (600 mm) CENTERS UNLESS OTHERWISE SHOWN. SPECIAL INLETS AND OUTLETS SHALL BE TIED TO THE PAVEMENT IN ACCORDANCE WITH DETAILS FOR LONGITUDINAL CONSTRUCTION JOINT SHOWN ON STANDARD 420001. TIE BARS WILL NOT BE PAID FOR SEPARATELY BUT SHALL BE CONSIDERED AS INCIDENTAL TO OUTLET (SPECIAL).
3. WHEN OUTLET (SPECIAL) IS CONSTRUCTED ADJACENT TO FLEXIBLE PAVEMENT, THE TIE BARS SHALL BE OMITTED AND ALL CONSTRUCTION JOINTS SHALL BE PROVIDED WITH A DOWEL BAR CONFORMING TO ARTICLE 1006.11(b).
5. THIS WORK WILL BE PAID FOR AT THE CONTRACT UNIT PRICE PER CU. YD. (m) FOR OUTLET (SPECIAL) WHICH PRICE SHALL INCLUDE ALL LABOR AND MATERIAL AS SPECIFIED AND NO ADDITIONAL COMPENSATION WILL BE ALLOWED.

FILE NAME = c:\pw_work\pwidot\cearlockjd\d0120316\D670663-sht-details.dgn	USER NAME = cearlockjd	DESIGNED - JMS	REVISED -
		DRAWN - JMS	REVISED -
	PLOT SCALE = 40.0000 ' / in.	CHECKED -	REVISED -
	PLOT DATE = 10/18/2013	DATE - 062911	REVISED -

STATE OF ILLINOIS
DEPARTMENT OF TRANSPORTATION

DETAIL OF OUTLET (SPECIAL)

SCALE: NONE | SHEET NO. 1 OF 1 SHEETS | STA. | TO STA.

F.A.U. RTE.	SECTION	COUNTY	TOTAL SHEETS	SHEET NO.
*	(2X,3)RS-3 & 2RS-4	CHAMPAIGN	551	251
* F.A.U. 7152 & F.A.S. 1512		CONTRACT NO. 70663		
		ILLINOIS FED. AID PROJECT		