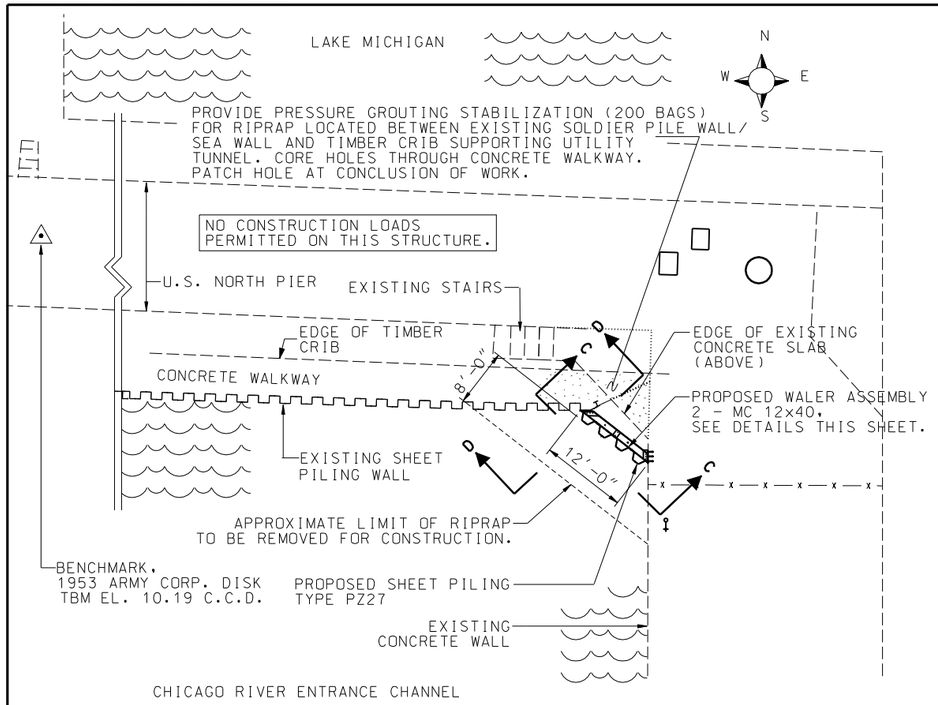

PLAN LOCATION B

0 10'
SCALE IN FEET

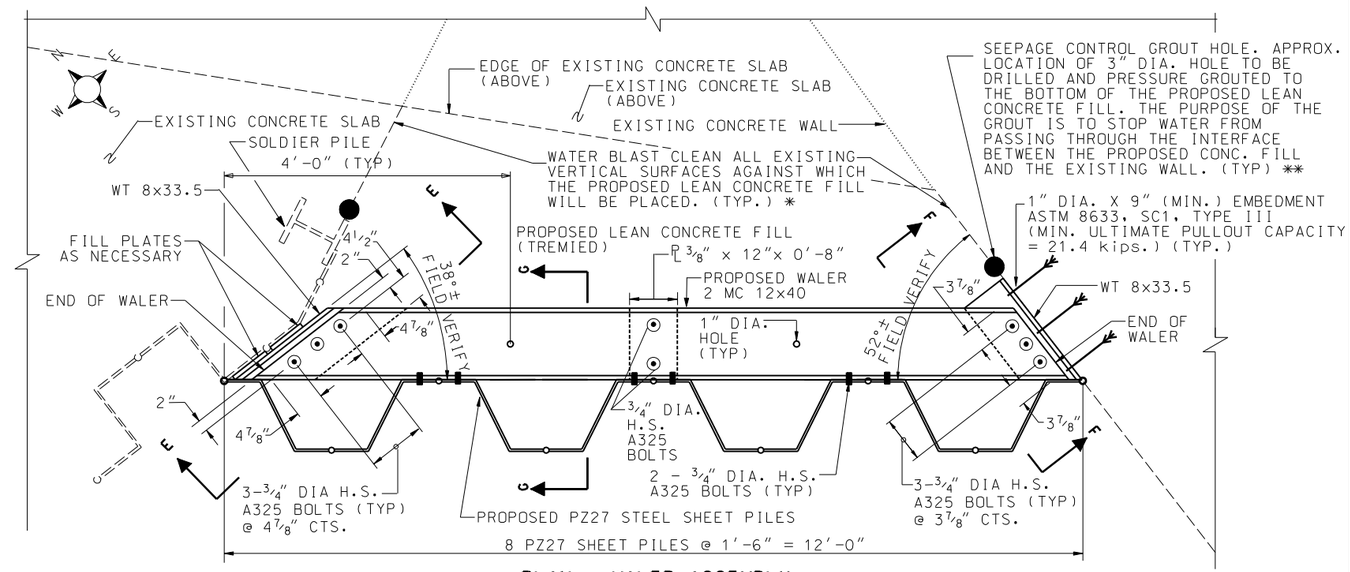

PLAN - WALER ASSEMBLY

* COST INCLUDED WITH LEAN CONCRETE FILL

** TYPE B WATERSTOP MAY BE USED IN LIEU OF GROUT HOLE. COST ADJUSTMENT NOT ALLOWED. PAID FOR AS "SEEPAGE CONTROL GROUT HOLE".

NOTE: THE CONTRACTOR IS RESPONSIBLE FOR MAKING MINOR FIELD ADJUSTMENTS TO THE SHEETING LAYOUT TO CORRECT OVER- AND UNDER- RUN OF SHEETING.

0 1'
SCALE IN FEET

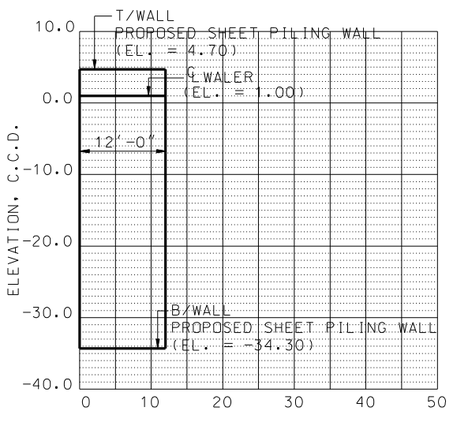

ELEVATION C-C

0 10'
SCALE IN FEET

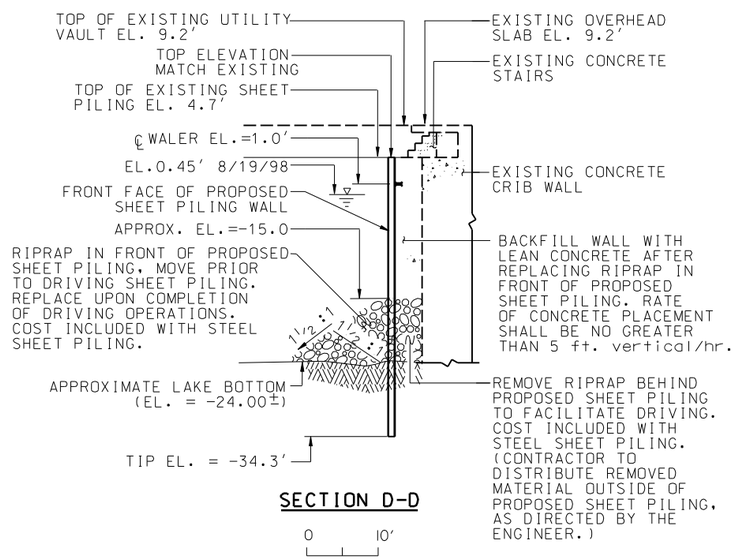

SECTION D-D

0 10'
SCALE IN FEET

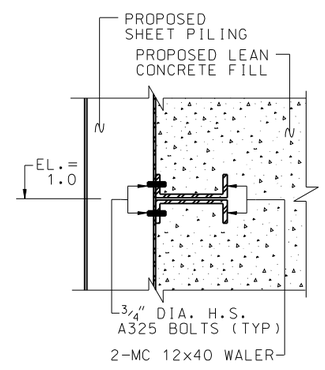

SECTION G-G

0 1'
SCALE IN FEET

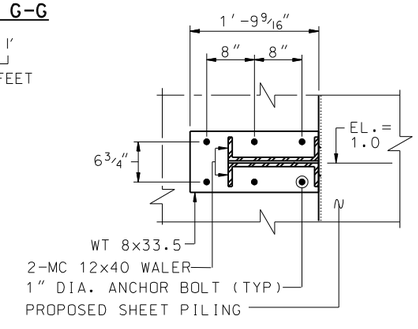

SECTION F-F

0 1'
SCALE IN FEET

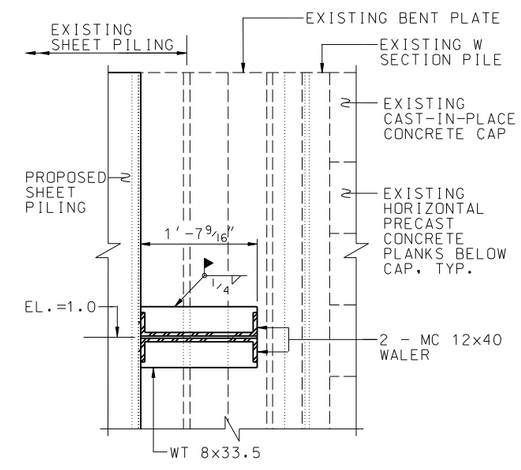

SECTION E-E

0 1'
SCALE IN FEET

BILL OF MATERIAL

ITEM	UNIT	QUANTITY
LEAN CONCRETE FILL	CU YD	70
STEEL SHEET PILING	SQ FT	468
WALER ASSEMBLY	LS	1
SEEPAGE CONTROL GROUT HOLE	EACH	2
PRESSURE GROUTING	BAGS	200

NOTE: SEE SHEET 2 FOR CONSTRUCTION SEQUENCE.

Designed By TMM Checked By GMS
Drawn By JJF Checked By TMM
1/25/2010 3:42:54 PM
G:\OwrProgImpl\Projects\Lake Michigan Chicago River Leakage Control\Final Plans\Sheet_5_e_Lctnb.dgn