F.A.U RTE.	SECTION	COUNTY	TOTAL SHEETS	SHEET NO.
0085	00-00246-01-FP	MCHENRY	236	34
STA.		TO STA.		
FED. ROAD DIST. NO. 1	ILLINOIS	FED. AID PROJECT		

CONTRACT NO: 63266

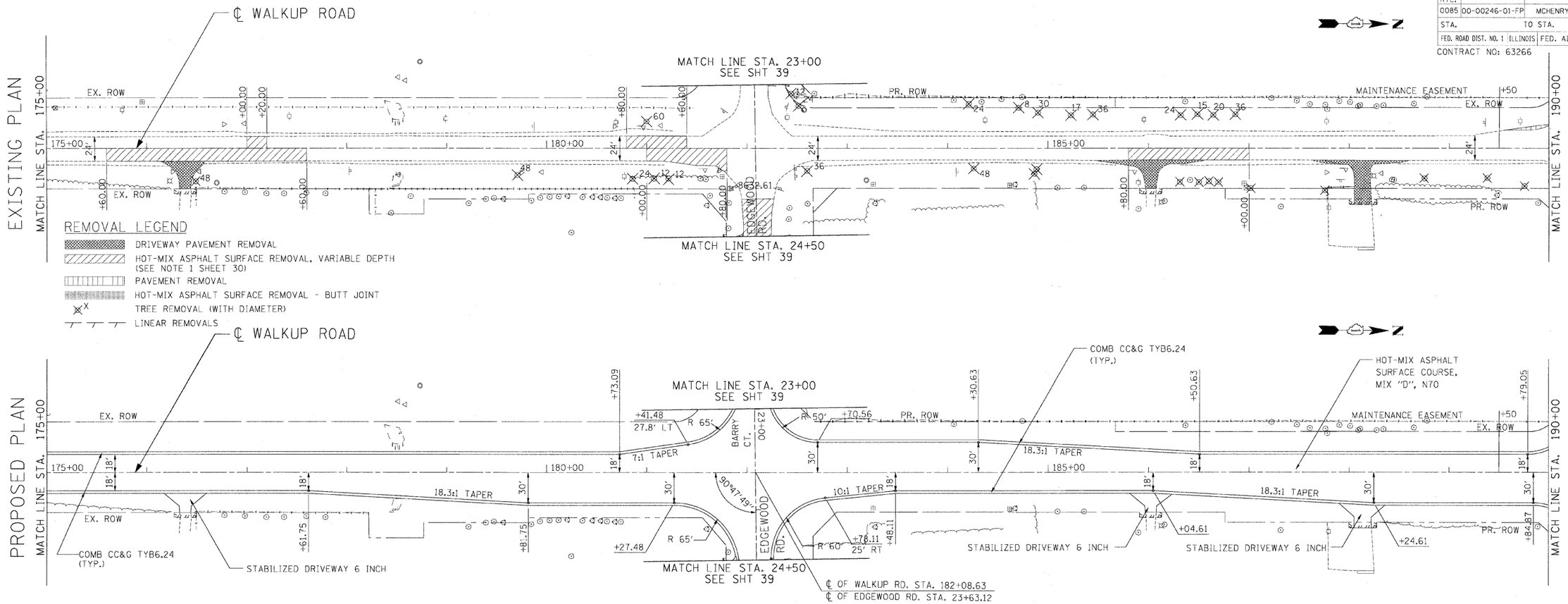

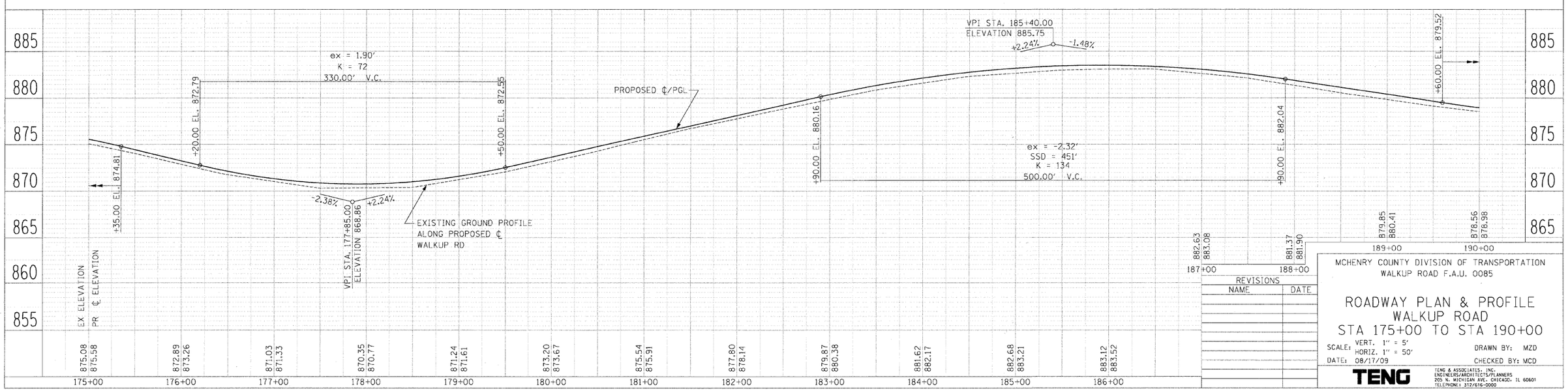

REVISIONS	
NAME	DATE

MCHENRY COUNTY DIVISION OF TRANSPORTATION
WALKUP ROAD F.A.U. 0085

ROADWAY PLAN & PROFILE
WALKUP ROAD
STA 175+00 TO STA 190+00

SCALE: VERT. 1" = 5'
HORIZ. 1" = 50'
DATE: 08/17/09
DRAWN BY: MZD
CHECKED BY: MCD

TENG
TENG & ASSOCIATES, INC.
ENGINEERS/ARCHITECTS/PLANNERS
205 N. MICHIGAN AVE. CHICAGO, IL 60601
TELEPHONE: 312/616-0000