F.A.U. RTE.	SECTION	COUNTY	TOTAL SHEETS	SHEET NO.
0085	00-00246-01-FP	MCHENRY	236	44
STA.		TO STA.		
FED. ROAD DIST. NO. 1	ILLINOIS	FED. AID PROJECT		

CONTRACT NO: 63266

UW-06

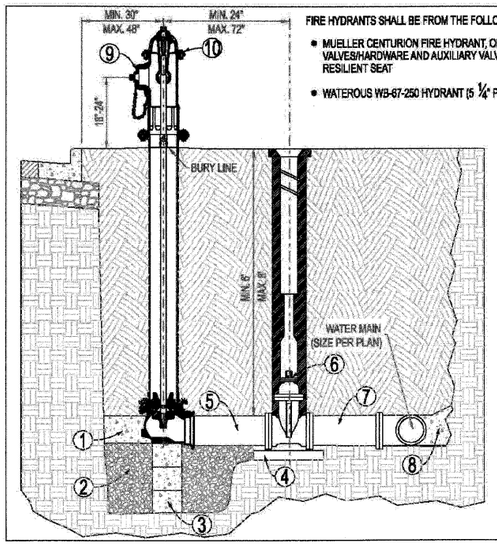

FIRE HYDRANTS SHALL BE FROM THE FOLLOWING LIST, AS APPROVED BY THE CITY:

- MUELLER CENTURION FIRE HYDRANT, OPT-094 (5 ¼" BARREL) WITH MUELLER VALVES/HARDWARE AND AUXILIARY VALVE 6" GATE VALVE NO. 2360-23-9020 MODIFIED WEDGE RESILIENT SEAT
- WATEROUS W3-67-250 HYDRANT (5 ¼" PACER) WITH SERIES 2500-1 RESILIENT WEDGE GATE VALVE

1. PROVIDE CLASS SI CONCRETE BASE AND BLOCKING AGAINST UNDISTURBED EARTH
2. DRAIN SUMP TO BE ¾ CUBIC YARD OF ¾" WASHED STONE
3. CONCRETE SUPPORT
4. CONCRETE BLOCK OR BRICK SUPPORT
5. PIPE AS REQUIRED TO MAINTAIN 24" SEPARATION AS SHOWN (DIRECT MECHANICAL JOINT CONNECTION IF APPROVED BY CITY)
6. RUBBER VALVE BOX STABILIZER
7. USE "CORTEN" STEEL TIE RODS BETWEEN AUXILARY VALVE AND WATER MAIN (STAINLESS STEEL MAY BE REQUIRED BY THE CITY ENGINEER). ANY DISTANCE GREATER THAN 30" SHALL BE RODDED TO MEGA-LUG FLANGE. NO COUPLINGS ARE PERMITTED IN RODS.
8. CONCRETE BLOCKING CAST IN PLACE 3000 P.S.I.
9. 4 ½" PORT TO FACE PAVEMENT OR AS DIRECTED BY CITY ENGINEER
10. ALL NEWLY INSTALLED HYDRANTS MUST BE TOP COATED WITH RUST-OLEUM FIRE HYDRANT ENAMEL (COLOR = FIRE HYDRANT RED)
11. MIN. 48" BETWEEN HYDRANT AND ANY VERTICAL OBSTRUCTIONS.
12. MIN. 72" BETWEEN HYDRANT AND ANY LANDSCAPING WITH A MATURE HEIGHT GREATER THAN 12".
13. ALL VALVE AND HYDRANT HARDWARE MUST BE STAINLESS STEEL INCLUDING NUTS, BOLTS, AND WASHERS.

Approved: City Engineer	Drawing Name	Drawing Number	
Victor C. Ramirez, P.E. Director of Engineering and Building	FIRE HYDRANT	UW-06	CRYSTAL LAKE ILLINOIS Engineering Division
		Date: 11/2/2007	
		Drawn EM / Checked JN	

L:\ENGINEERING AND BUILDING\ENGINEERING\DETAILS AND STANDARDS\

UW-01

NOTE:
ALL MANHOLES MUST BE DAMP PROOF PER IDOT SPECIFICATIONS 1060 "WATER PROOFING MATERIALS"

ALL LIDS TO BE USED ON WATER SYSTEM STRUCTURE SHALL BEAR THE WORDS "CITY OF CRYSTAL LAKE WATER".

DRAIN FOR VALVE VAULT SHALL BE CONSTRUCTED ONLY WHEN SHOWN ON THE PLANS.

FRAME AND RING(S) TO BE SET IN MORTAR BED OR SEALED WITH A PREFORMED BITUMEN SEAL (E-Z-STICK OR APPROVED EQUAL).

FOR PRESSURE CONNECTION, SEE DETAIL UW-2.

DIAMETER OF WATER MAIN	D	T
8 INCHES AND OVER	5 FT.	6"

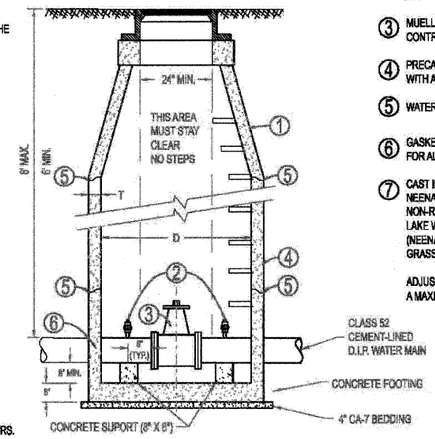

NOTE: ALL VALVE HARDWARE MUST BE STAINLESS STEEL INCLUDING NUTS, BOLTS & WASHERS.

1. CONCENTRIC CONES REQUIRED
2. 1" (PREFERRED, 3/4" MIN.) MUELLER, A.Y. McDONALD, OR FORD CORPORATION STOP EACH SIDE OF VALVE MUST BE A COMPRESSION FITTING.
3. MUELLER 2360-23-9020 OR AMERICAN FLOW CONTROL 2500-1 RESILIENT SEAT GATE VALVE
4. PRECAST CONCRETE MANHOLE SECTIONS WITH A MINIMUM THICKNESS OF 5"
5. WATERTIGHT JOINT
6. GASKET-TYPE WATERSTOP COLLAR FOR ALL WATER MAIN CONNECTIONS
7. CAST IRON MANHOLE FRAME & COVER SIMILAR TO NEENAH R-1712, OR EQUAL WITH STANDARD DUTY, NON-ROCKING TYPE LIDS WITH "CITY OF CRYSTAL LAKE WATER" CAST INTO LID. (NEENAH R-2535, OR EQUAL MAY BE USED IN GRASSY AREAS)

ADJUSTING RING HEIGHT NOT TO EXCEED 8" WITH A MAXIMUM OF THREE (3) ADJUSTMENT RINGS.

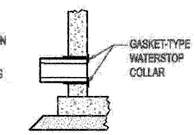

Approved: City Engineer	Drawing Name	Drawing Number	
Victor C. Ramirez, P.E. Director of Engineering and Building	STANDARD VALVE VAULT	UW-01	CRYSTAL LAKE ILLINOIS Engineering Division
		Date: 4/15/2007	
		Drawn EM / Checked JN	

L:\ENGINEERING AND BUILDING\ENGINEERING\DETAILS AND STANDARDS\

UW-03

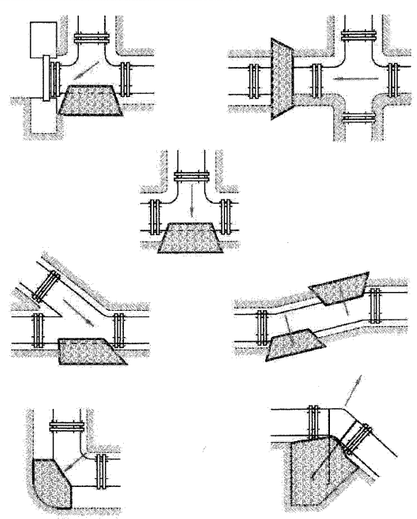

BEARING AREA (SQ. FT.)					
PIPE SIZE	TEE/PLUG	90°	45°	21 1/2°	11 1/4°
6	4	2	1	1	1
8	8	4	3	1	1
10	7	5	3	2	1
12	8	6	4	3	2
14	12	9	6	4	3
16	15	12	7	5	3
18	18	15	9	5	4
24	40	30	15	10	5

NOTES:

ALL BLOCKING SHALL BE POURED CLASS SI CONCRETE AGAINST UNDISTURBED EARTH.

ALL BENDS OR ELBOWS GREATER THAN 11 1/4" SHALL HAVE THRUST BLOCKING. FORM AS TO NOT COVER BOLTS.

IN LEU OF THRUST BLOCKING "MEGA LUG" (EBAA) JOINT RESTRAINTS OR APPROVED EQUAL CAN BE USED AS APPROVED BY THE ENGINEER.

Approved: City Engineer	Drawing Name	Drawing Number	
Victor C. Ramirez, P.E. Director of Engineering and Building	THRUST BLOCK INSTALLATION	UW-03	CRYSTAL LAKE ILLINOIS Engineering Division
		Date: 4/15/2007	
		Drawn EM / Checked JN	

L:\ENGINEERING AND BUILDING\ENGINEERING\DETAILS AND STANDARDS\

GE-02d

WATER MAIN:

1. Thrust blocking shall be installed on water mains at all bends, tees, elbows, etc. except as noted below.
2. Thrust blocks not permitted with 45" vertical bends in water main □ these shall be restrained with □Mega-Lug□ or equivalent.
3. Water main shall be ductile iron pipe, Class 52 conforming to A.N.S.I. A-21.51 or AWWA C-151.
4. Gaskets and cast iron fittings shall conform to A.N.S.I. A-21.11 or AWWA C-110 and C-111 water main shall be cement lined in conformance with A.N.S.I. A-21.4 or AWWA C-104.
5. Minimum cover from finished grade to top of water main shall be six (6) feet; Maximum cover shall be eight (8) feet.
6. Water Main Taps: an Illinois licensed plumber is required for any water main tap.
7. All water mains shall be subjected to a pressure test and a separate leakage test at system pressure for 24 hours by the Contractor. Hydrostatic pressure test and leakage shall be based on 125 psi for two (2) hours. Water mains shall be chlorinated in accordance with the Standard Specifications.
8. The Underground Contractor shall consider incidental to the contract any chlorination and testing of existing water main where connections to and conclusion of such mains is indicated on the drawings. In the event that the pressure attributable to defective original workmanship and material, then the Contractor shall be entitled to additional payment for correcting the deficiencies.

G:

1. Subgrades and bases shall be proof-rolled and approved by the Engineering Di[illegible] base or binder installation.
2. S[illegible]d proposed pavements shall be finished by the Excavation Co[illegible] within 0.1[illegible] minus, of plan elevation.
3. The Pav[illegible]or shall ensure that the subgrade has been pro[illegible]ed and that the finished [illegible]rade elevation has been graded within the [illegible] allowed in these specifi[illegible]ess the Paving Contractor advises the [illegible] Engineer in writing prior to fi[illegible] for base course construction, it is [illegible] that the Contractor has ac[illegible] accepts responsibility for the[illegible]
4. For the purpose of prov[illegible]ap accessibility a[illegible]g with the American Disability Act and City Sta[illegible]bs shall be de[illegible] locations where public walks or pedestrian paths in[illegible] lines at [illegible]ections and other locations as directed.
5. ¾ inch thick premoulded fibre expan[illegible]wo (2) No. 4 plain round steel dowel bars shall be installed at designated [illegible]t all P.C., P.T., curb returns and at the end of each pour. Alternate end[illegible]ars shall be greased and fitted with metal expansion tubes.
6. ¾ inch thick fibre expansion [illegible]e used [illegible]se where the sidewalk coincides with the curb an[illegible]ontraction jo[illegible] saw cut at designated intervals in the curb. Th[illegible]ese joints shall b[illegible]d as incidental to the cost of the contract.
7. All poured in pla[illegible] curb and gutter shall incorpora[illegible] 4 reinforcing bars installed [illegible] curb and gutter crosses utility serv[illegible] cost of which shal[illegible]ed incidental to the cost of concrete curb [illegible]
8. Sidew[illegible] required) shall be of the thickness and dimensions [illegible] the con[illegible]ns. All sidewalk concrete shall be a minimum of 6.1 bag [illegible]T c[illegible]rete) and shall develop a minimum of 3,500 psi compressive [illegible]wenty [illegible]ays. Contraction joints shall be set at four (4) foot centers, and on[illegible] inch) premoulded fibre expansion joints at forty (40) foot centers and wh[illegible] walk meets the curb or another sidewalk, or at the end of each pour. All sidew[illegible] constructed over utility trenches and/or abutting driveway aprons shall be reinforced [illegible] three (3) No. 4 reinforcing bars (10 foot minimum length).

Approved: City Engineer	Drawing Name	Drawing Number	
Victor C. Ramirez, P.E. Director of Engineering and Building	STANDARD NOTES AND SPECIFICATIONS	GE-02d	CRYSTAL LAKE ILLINOIS Engineering Division
		Date: 6/1/2007	
		Drawn EM / Checked LZ	

L:\ENGINEERING AND BUILDING\ENGINEERING\DETAILS AND STANDARDS\

WATER MAIN GENTERAL NOTES:

1. PRE-CONSTRUCTION MEETING SHALL BE CONDUCTED WITH CITY OF CRYSTAL LAKE STAFF AND ALL CONTRACTORS PRIOR TO COMMENCING CONSTRUCTION ACTIVITIES (SCHEDULE MEETING WITH THE ENGINEERING DIVISION INSPECTION SERVICES COORDINATOR AT 815-356-3615).
2. 24-HOUR EMERGENCY CONTACT NUMBERS SHALL BE PROVIDED TO CITY STAFF AT THE PRE-CONSTRUCTION MEETING.
3. WORKING HOURS SHALL BE LIMITED TO THE HOURS OF 7:00 A.M. AND 7:00 P.M. ON WEEKDAYS ONLY (EXCEPT IN CASES OF EMERGENCY). NON-EMERGENCY WORK ON WEEKENDS OR HOLIDAYS IS NOT PERMITTED PER CITY CODE EXCEPT UNDER A SEPARATE PERMIT FROM THE CITY ENGINEER, LIMITED TO A PERIOD OF NOT MORE THAN THREE DAYS AND RENEWABLE ONLY ONCE.
4. PUBLIC/PRIVATE STREETS SHALL BE KEPT FREE OF DIRT AND DEBRIS WITH REGULAR CLEANING, SWEEPING, AND SCRAPING CONDUCTED BY THE CONTRACTOR. JUNK AND DEBRIS SHALL NOT BE ALLOWED TO ACCUMULATE, BLOW, OR SCATTER ONTO STREETS OR ADJACENT PROPERTIES.
5. J.U.L.I.E. SHALL BE CONTACTED FOR UTILITY LOCATIONS ON-SITE AND IN THE ADJACENT RIGHTS-OF-WAY.
6. CONTRACTOR SHALL PROVIDE AND MAINTAIN FENCING, BARRICADES, TRAFFIC CONTROL SIGNS, AND OTHER SAFEGUARDING MEASURES DURING THE COURSE OF ALL WORK TO PROTECT THE PUBLIC FROM THE CONSTRUCTION OPERATIONS.
7. MAINTAIN ACCESS TO ADJACENT STREETS DURING CONSTRUCTION. NO CLOSING OF STREETS UNLESS APPROVAL FIRST OBTAINED FROM THE AGENCY WITH JURISDICTION (CITY ENGINEERING DIVISION, MCHENRY COUNTY DEPARTMENT OF TRANSPORTATION, ILLINOIS DEPARTMENT OF TRANSPORTATION, ETC).
8. ANY DAMAGE TO PUBLIC RIGHT-OF-WAY, PUBLIC UTILITIES, STREETS, CURB, ETC. SHALL BE REPAIRED /REPLACED AS SOON AS POSSIBLE AND AS DIRECTED BY THE ENGINEERING DIVISION.
9. THE CONTRACTOR SHALL GIVE THE CITY OF CRYSTAL LAKE, ILLINOIS DEPARTMENT OF TRANSPORTATION, AND ANY OTHER GOVERNMENTAL AGENCY HAVING JURISDICTION, AT LEAST TWO (2) WORKING DAYS NOTICE EXCLUDING SATURDAY AND SUNDAY PRIOR TO THE INITIATION OF ANY PHASE OF CONSTRUCTION. CONTRACTOR SHALL IMMEDIATELY NOTIFY IF CONSTRUCTION HAS CEASED AND RENEW THE TWO (2) WORKING DAY NOTIFICATION THEREAFTER.
10. THE CONTRACTOR SHALL BE RESPONSIBLE FOR OBTAINING ALL REQUIRED PERMITS FOR CONSTRUCTION ALONG OR ACROSS EXISTING STREETS OR HIGHWAYS. THE CONTRACTOR SHALL MAKE ARRANGEMENTS FOR THE PROPER BRACING, SHORING AND OTHER PROTECTION OF ALL ROADWAYS BEFORE CONSTRUCTION BEGINS.
11. CONTRACTOR SHALL REIMBURSE THE CITY OF CRYSTAL LAKE FOR THE COST OF OVERTIME INSPECTION BEYOND THE NORMAL EIGHT (8) HOUR DAY, INCLUDING WEEKENDS AND HOLIDAYS.

REVISIONS	
NAME	DATE

MCHENRY COUNTY DIVISION OF TRANSPORTATION
WALKUP ROAD F.A.U. 0085

WATER MAIN DETAILS
I

SCALE: N.T.S. DRAWN BY: MZD
DATE: 08/17/09 CHECKED BY: MCD

TENG

TENG & ASSOCIATES, INC.
ENGINEERS/ARCHITECTS/PLANNERS
205 N. MICHIGAN AVE. CHICAGO, IL 60601
TELEPHONE: 312/616-0000