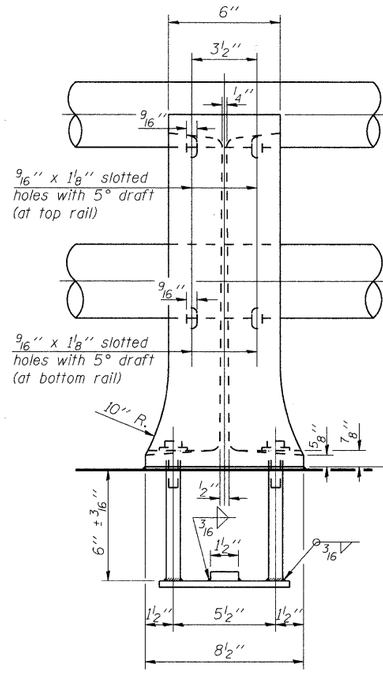

VIEW B-B

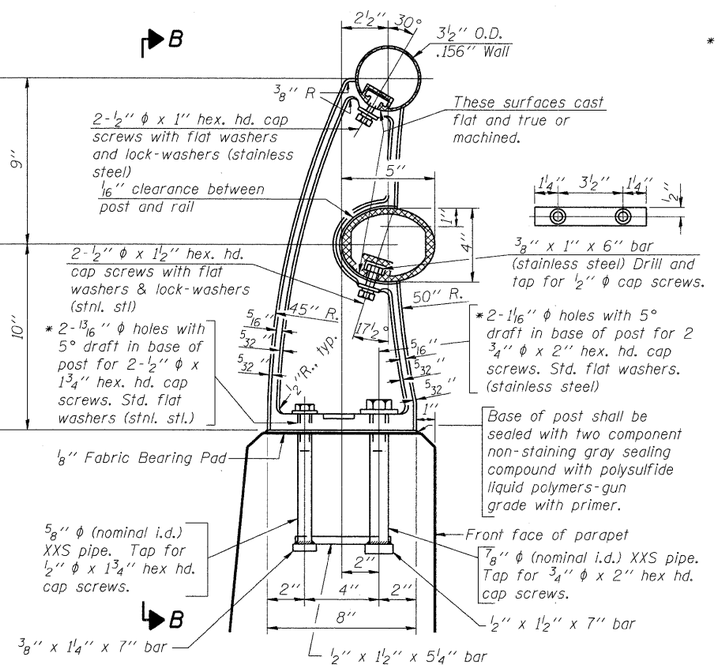

SECTION A-A

RAIL POST DETAILS

* In lieu of the cast-in-place anchor device shown, the Contractor has the option of drilling and setting stainless steel anchor rods of the same diameter and grade as the specified cap screws according to Article 509.06 of the Standard Specifications. Embedment shall be according to the manufacturer's specifications.

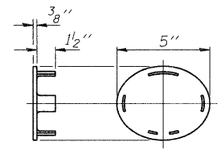

CAST END CAP

For bottom rail
DRIVE FIT TYPE

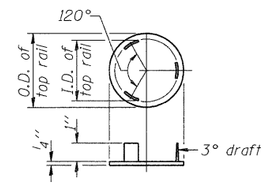

CAST END CAP

For top rail

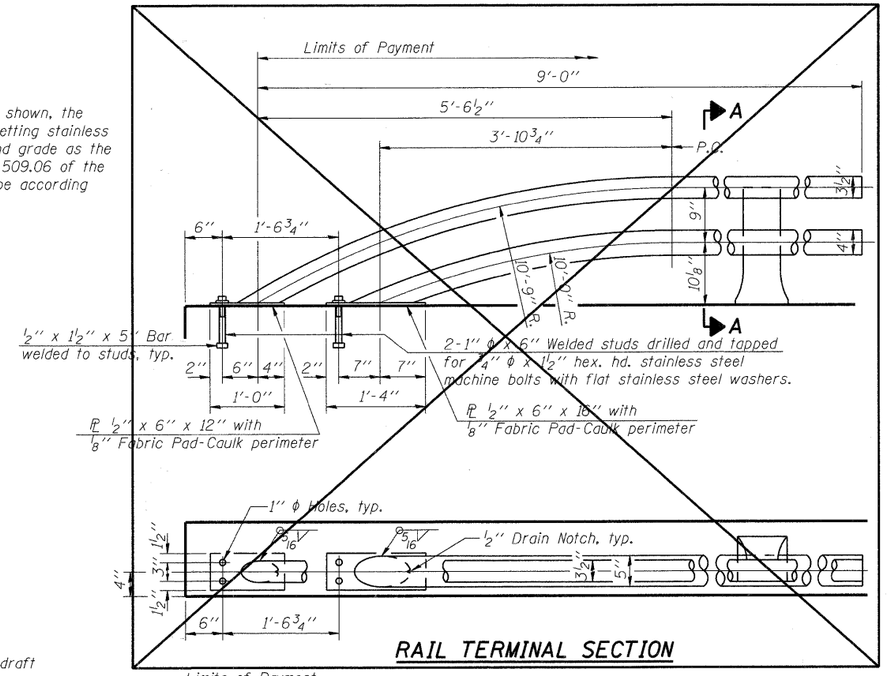

RAIL TERMINAL SECTION

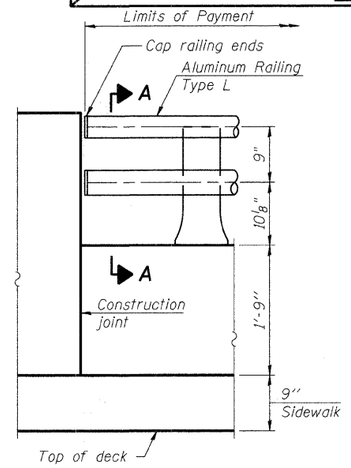

RAIL END TREATMENT FOR TYPE 5 AND 6 TERMINAL

Note:
The end rail post shall be set back as required for the terminal rail section.

BILL OF MATERIAL

Item	Unit	Quantity
Aluminum Railing, Type L	Foot	281

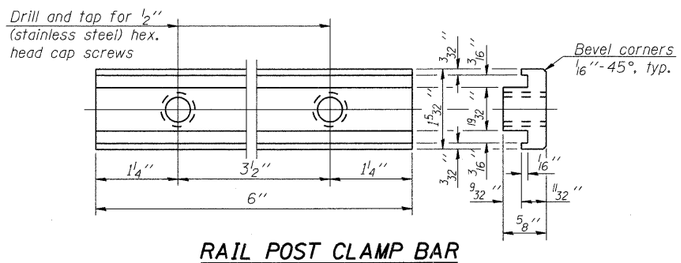

RAIL POST CLAMP BAR

For Top Rail

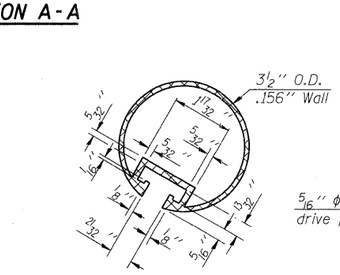

SECTION THRU TOP RAIL

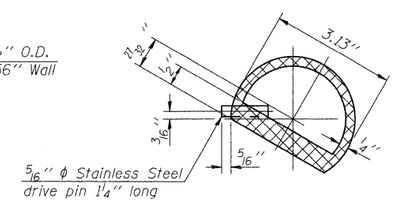

SECTION THRU SPLICE

For Top Rail

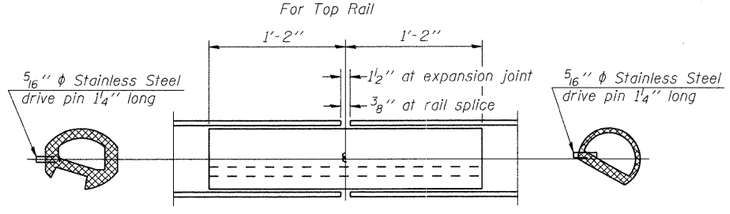

BOTTOM RAIL

TOP RAIL

RAIL SPLICE

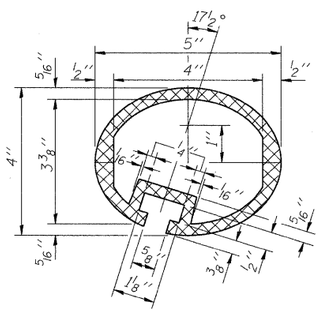

SEC. THRU ELLIPTICAL RAIL SECTION

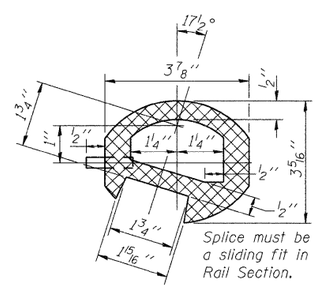

SEC. THRU SPLICE

Notes:
All Posts shall be normal to parapet.
All joints in rail shall be spliced per detail.
All exposed rail ends shall be capped per detail.
Provide 1-⅛" and 2-1/16" Aluminum Shims for 25% of the Posts. Rail elements shall be parallel to Grade-high spots will be ground and low spots shimmed.
See sheet S-12 of S-25 for rail post spacing.

ALUMINUM RAILING TYPE L

THOMPSON ROAD
OVER NIPPERSINK CREEK
SECTION NO. 06-00005-00-BR
McHENRY COUNTY
STATION 206+30.48
STRUCTURE NO. 056-6006

DATE: 11/18/09

DESIGNED	MGH/JPG
CHECKED	KMA
DRAWN	WJH
CHECKED	RGD

FILE NAME: 080563_Rail.dgn 11/30/2009
PLOT DRIVER: pdf.pltd
PEN TABLE: standard-trans.tbl

Illinois Professional Design Firm # 184-000108
SEC GROUP, INC.
• Engineering • Surveying • Planning • Landscape Architecture
420 N. Front Street, McHenry, IL 60050
t. 815.385.1778 f. 815.385.1781
www.secgroupinc.com
• McHenry, IL • Yorkville, IL • New Lenox, IL • Chicago, IL

SHEET NO. S-14	F.A.U RTE.	SECTION	COUNTY	TOTAL SHEETS	SHEET NO.
S-25 SHEETS	4081	06-00005-00-BR	McHENRY	45	25
			CONTRACT NO. 63409		
	FED. ROAD DIST. NO. 1	ILLINOIS	FED. AID PROJECT		