GUARDRAIL:
STA 114+00 TO STA 114+04

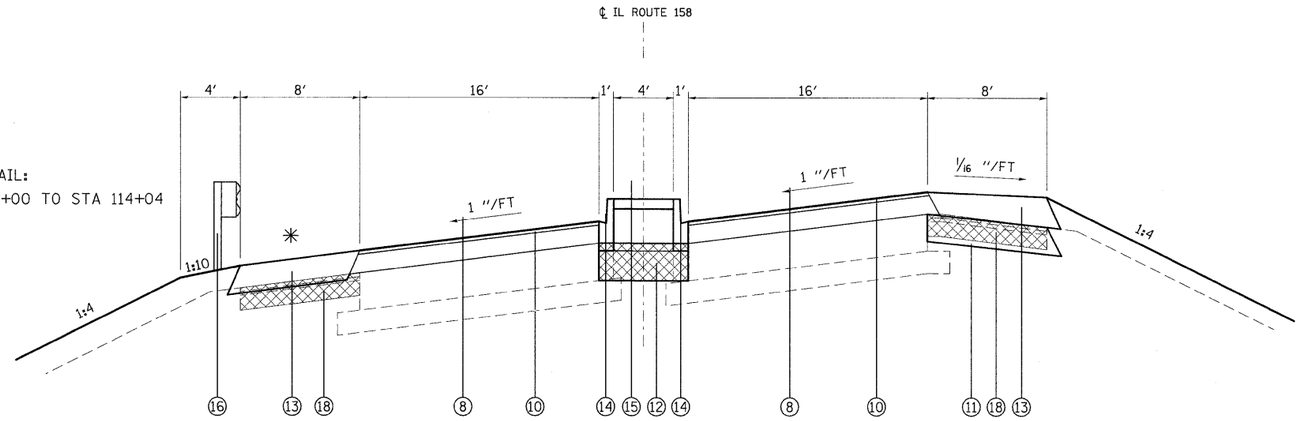

PROPOSED SUPERELEVATED TYPICAL SECTION

STA 114+00 TO STA 114+80.10

LEGEND

1. EXISTING PORTLAND CEMENT CONCRETE PAVEMENT - 10″
2. EXISTING SUB-BASE GRANULAR MATERIAL, TYPE A - 6″
3. EXSITING BITUMINOUS CONCRETE SURFACE COURSE, SUB-CLASS I-11 (SHOULDERS) - 1½″
4. EXISTING BITUMINOUS CONCRETE BINDER COURSE (SHOULDERS) - 1½″
5. EXISTING STABILIZED SHOULDERS
6. EXISTING COMBINATION CONCRETE CURB AND GUTTER, TYPE B-9.06
7. EXISTING PORTLAND CEMENT CONCRETE MEDIAN SURFACE - 4″
8. PROPOSED HMA SURFACE COURSE - 1½″
9. PROPOSED LEVELING BINDER - 1″
10. PROPOSED HMA BINDER COURSE - VARIES FROM __″ TO __″
11. PROPOSED HMA BASE COURSE - 11″
12. PROPOSED HMA BASE COURSE - 10″
13. PROPOSED HMA SHOULDER
14. PROPOSED COMBINATION CURB AND GUTTER, TYPE B-9.06
15. PROPOSED CONCRETE MEDIAN SURFACE - 4″
16. PROPOSED GUARDRAIL
17. PROPOSED AGGREGATE WEDGE SHOULDER, TYPE B
18. PROPOSED PAVED SHOULDER REMOVAL

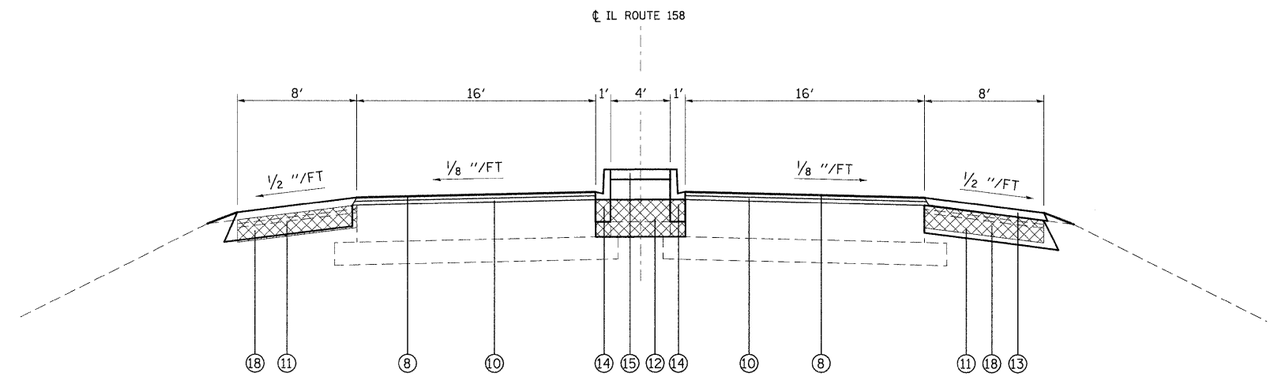

PROPOSED TANGENT TYPICAL SECTION

STA 114+80.10 TO STA 115+00

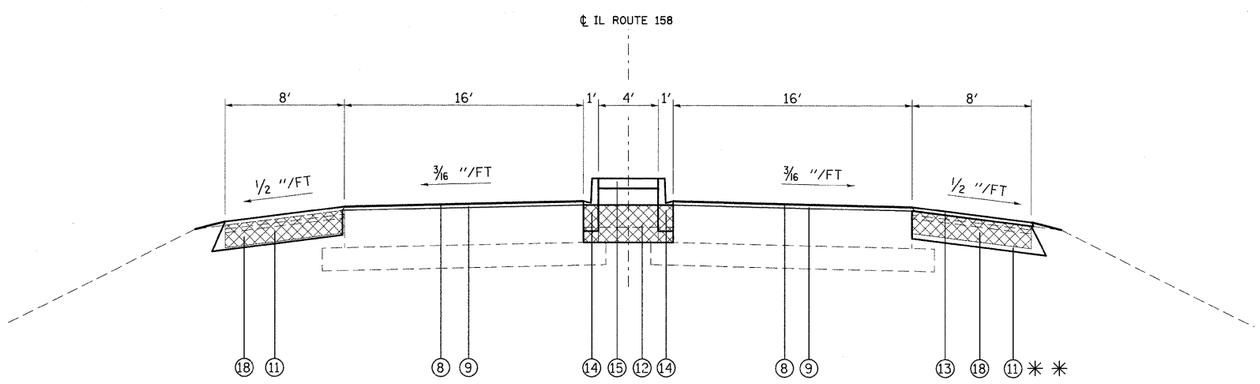

PROPOSED TANGENT TYPICAL SECTION

STA 115+00 TO STA 117+55.54

✳ ✳ HMA BASE COURSE - 11″ ENDS AT STA 116+50

✳ ON THE INSIDE OF THE CURVE THE SHOULDER SLOPE SHALL BE THE SAME AS THE PAVEMENT SUPERELEVATION WITH A MINIMUM SLOPE OF ½″ PER FOOT.

FILE NAME = c:\pw_work\PWIDOT\OWENBJ\dms52558\plm06606a.dgn	USER NAME = owenbj	DESIGNED -	REVISED -	STATE OF ILLINOIS DEPARTMENT OF TRANSPORTATION	PROPOSED TYPICAL SECTIONS	F.A.P. RTE.	SECTION	COUNTY	TOTAL SHEETS	SHEET NO.
	PLOT SCALE = 50.0000 ′ / IN.	DRAWN -	REVISED -			809	67-1HBR	MONROE	144	9
	PLOT DATE = 12/11/2009	CHECKED -	REVISED -					CONTRACT NO. 76977		
		DATE -	REVISED -		SCALE: SHEET NO. OF SHEETS STA. TO STA.	FED. ROAD DIST. NO.	ILLINOIS	FED. AID PROJECT		