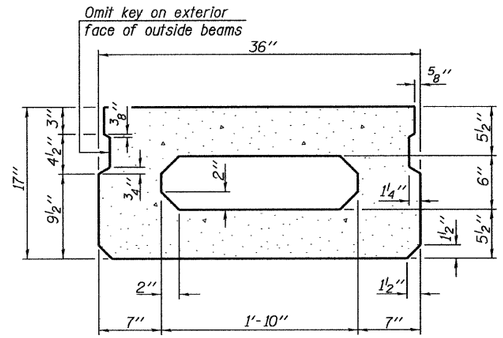

SECTION A-A
(Showing dimensions)

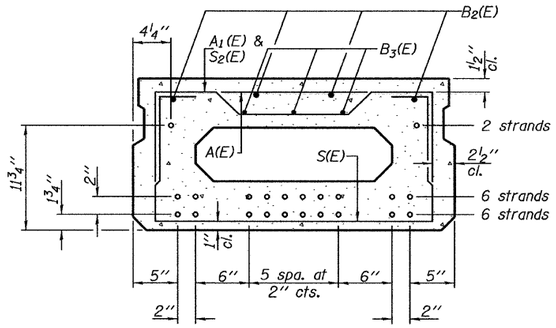

SECTION A-A
(Showing reinforcement and permissible strand locations)

Note: Place the number of strands specified in each row symmetrically about the centerline of beam in the permissible strand locations shown.

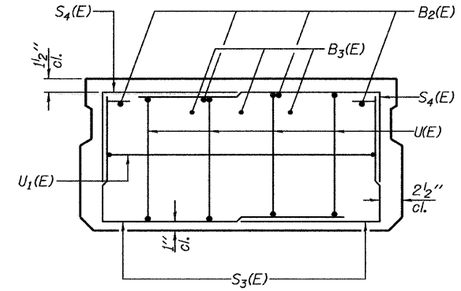

VIEW B-B

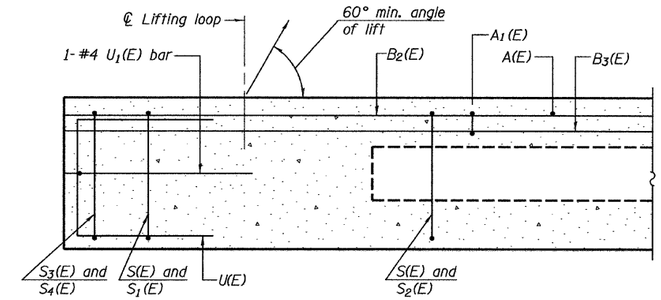

SECTION C-C

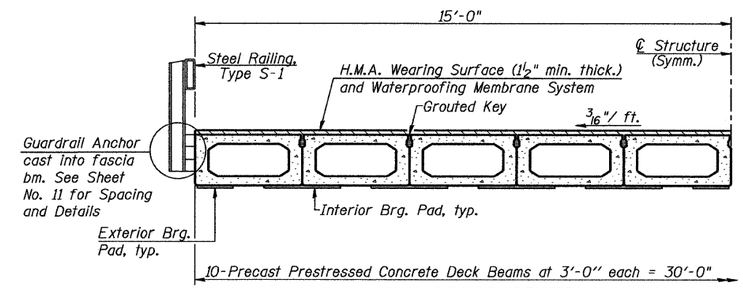

HALF CROSS SECTION

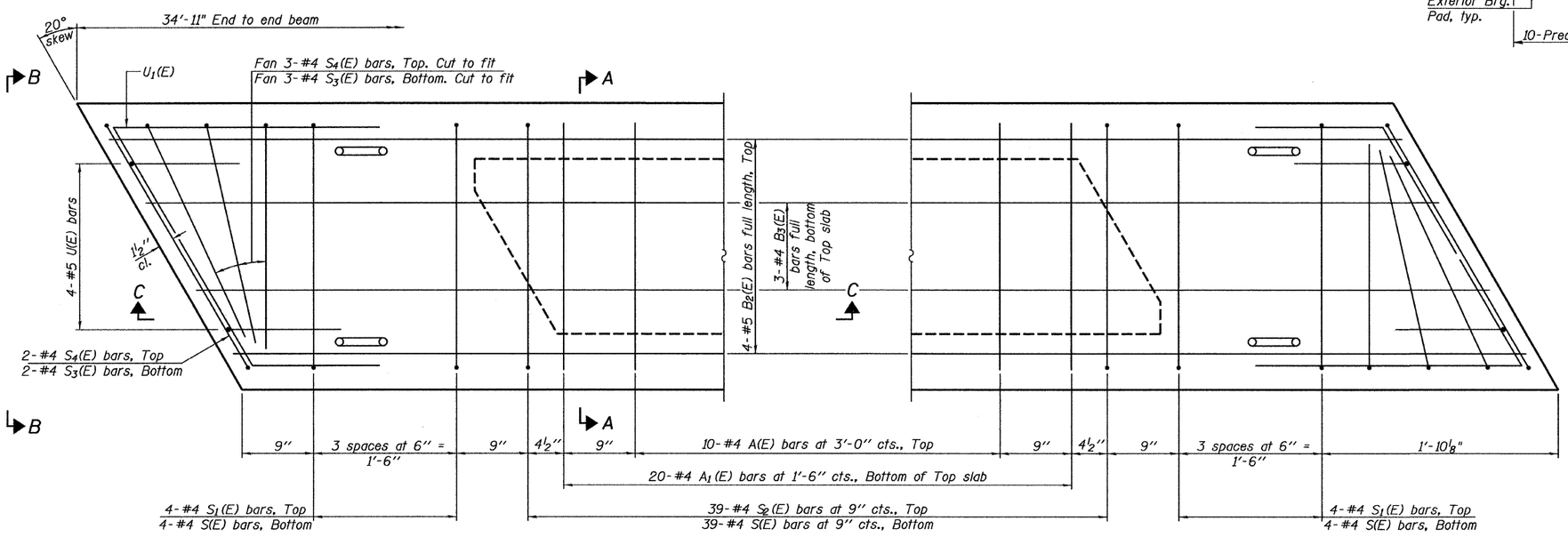

PLAN VIEW

Note: Spacing of S(E) and $S_2(E)$ bars may be adjusted up to 4" in the immediate area of the transverse tie diaphragms to miss the block outs for the transverse ties.

BAR LIST
ONE BEAM ONLY
(For information only)

Bar	No.	Size	Length	Shape
A(E)	10	#4	2'-7"	—
$A_1(E)$	20	#4	2'-10"	~
$B_2(E)$	4	#5	34'-8"	—
$B_3(E)$	3	#4	34'-8"	—
S(E)	47	#4	5'-9"	⊔
$S_1(E)$	8	#4	4'-3"	⊓
$S_2(E)$	39	#4	4'-6"	⊓
$S_3(E)$	10	#4	4'-2"	⊐
$S_4(E)$	10	#4	3'-5"	⊐
U(E)	8	#5	3'-8"	⊏
$U_1(E)$	2	#4	6'-1"	⊑

Note: See sheet 10 of 18 for additional details and Bill of Material.

FILE NAME = $FILEL$	USER NAME = $USER$	DESIGNED -	REVISED -
		DRAWN -	REVISED -
	PLOT SCALE = $SCALE$	CHECKED -	REVISED -
	PLOT DATE = $DATE$	DATE -	REVISED -

Allen Henderson & Associates, Inc.
Civil and Structural Engineers Springfield, IL. 62703 Phone: (217)544-8033 IL. Design Firm No. 184-001907

17" X 36" PPC DECK BEAM
SPAN 2

SCALE: NONE | SHEET NO. 9 OF 18 SHEETS

F.A.S. RTE.	SECTION	COUNTY	TOTAL SHEETS	SHEET NO.
575	09-00074-00-BR	CASS	18	9
		CONTRACT NO. 93508		
FED. ROAD DIST. NO.	ILLINOIS	FED. AID PROJECT		