CONTRACT NO. 93518

F.A.U. RTE.	SECTION	COUNTY	TOTAL SHEETS	SHEET NO.
7982	*	SANGAMON	68	54
STA.		TO STA.		
FED. ROAD DIST. NO.	ILLINOIS	FED. AID PROJECT		
* 09-00447-03-PV		CITY OF SPRINGFIELD		

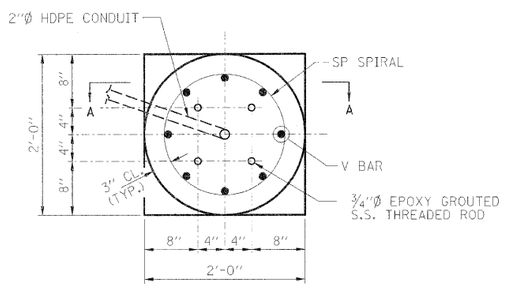

PLAN VIEW

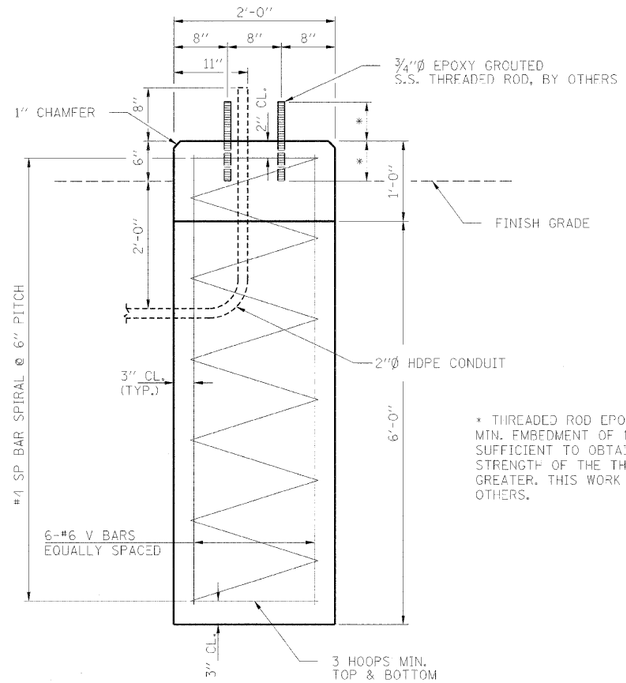

SECTION A-A

* THREADED ROD EPOXY GROUTED SHALL HAVE A MIN. EMBEDMENT OF 13 1/4" OR AN EMBEDMENT SUFFICIENT TO OBTAIN 1.25 X THE YIELD STRENGTH OF THE THREADED ROD, WHICHEVER IS GREATER. THIS WORK SHALL BE COMPLETED BY OTHERS.

DRILLED SHAFT CONCRETE FOUNDATION FOR INTERPRETIVE MARKER

NOTES:
COST OF PVC CONDUIT SHALL BE INCLUDED WITH CONCRETE STRUCTURES.

STAINLESS STEEL THREADED RODS SHALL MEET THE REQUIREMENTS OF ASTM F593 (AISI 304/316). COST OF S.S. THIS WORK SHALL BE COMPLETED BY OTHERS.

SEE STREETSCAPE PLANS FOR LOCATIONS.

THE CONTRACTOR MAY ELECT TO USE THE OPTIONAL CONCRETE FOUNDATION. NO ADDITIONAL COMPENSATION WILL BE ALLOWED FOR USE OF THIS FOUNDATION. THE OPTIONAL CONCRETE FOUNDATION SHALL BE ACCORDING TO IDOT STANDARD SPECIFICATIONS FOR ROAD AND BRIDGE CONSTRUCTION ADOPTED 2007, SECTION 502, 503 & 508.

BILL OF MATERIAL
ONE DRILLED SHAFT FOUNDATION ONLY

	BAR	NO.	SIZE	LENGTH	SHAPE
**	SP	1	#2	6'-7"	
	V	6	#6	6'-8"	
	DRILLED SHAFT CONCRETE FOUNDATION			CU.YD.	0.9
	REINFORCEMENT BARS			POUND	120

** LENGTH IS HEIGHT OF SPIRAL

12 DRILLED SHAFT CONCRETE FOUNDATIONS FOR INTERPRETIVE MARKERS REQUIRED.

MIN. BAR LAPS

#4 SPIRALS: 2'-0"

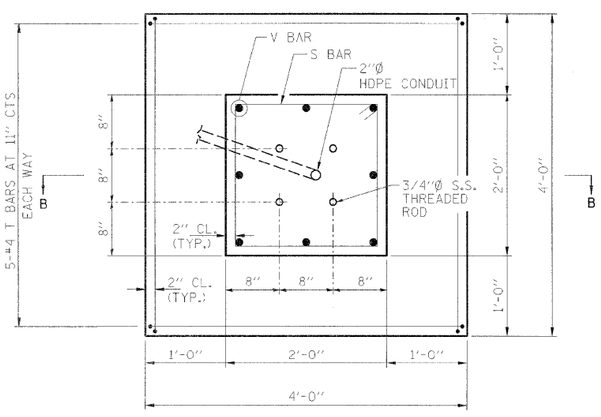

PLAN VIEW

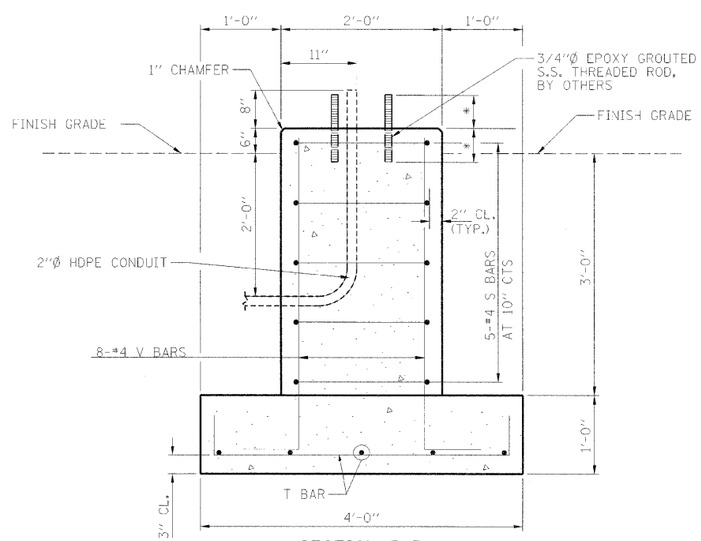

SECTION B-B

* THREADED ROD EPOXY GROUTED SHALL HAVE A MIN. EMBEDMENT OF 13 1/4" OR AN EMBEDMENT SUFFICIENT TO OBTAIN 1.25 X THE YIELD STRENGTH OF THE THREADED ROD, WHICHEVER IS GREATER. THIS WORK SHALL BE COMPLETED BY OTHERS.

OPTIONAL CONCRETE FOUNDATION FOR INTERPRETIVE MARKER

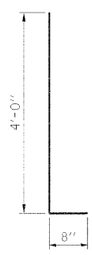

BAR V

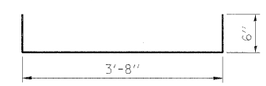

BAR T

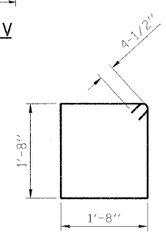

BAR S

NOTES:
COST OF PVC CONDUIT SHALL BE INCLUDED WITH CONCRETE STRUCTURES.

STAINLESS STEEL THREADED RODS SHALL MEET THE REQUIREMENTS OF ASTM F593 (AISI 304/316). COST OF S.S. THIS WORK SHALL BE COMPLETED BY OTHERS.

SEE STREETSCAPE PLANS FOR LOCATIONS.

THE CONTRACTOR MAY ELECT TO USE THE OPTIONAL CONCRETE FOUNDATION. NO ADDITIONAL COMPENSATION WILL BE ALLOWED FOR USE OF THIS FOUNDATION. THE OPTIONAL CONCRETE FOUNDATION SHALL BE ACCORDING TO IDOT STANDARD SPECIFICATIONS FOR ROAD AND BRIDGE CONSTRUCTION ADOPTED 2007, SECTION 502, 503 & 508.

REVISIONS	
NAME	DATE

ILLINOIS DEPARTMENT OF TRANSPORTATION

MISCELLANEOUS FOUNDATION DETAILS

FAU RTE 7982 CAPITOL AVE
SEC NO. 09-00447-03-PV
SANGAMON COUNTY, ILLINOIS

SCALE: VERT.
HORIZ.
DATE 10/9/09

DRAWN BY DAB
CHECKED BY MNM

LAYOUT	MNM	11/27/07
DRAWN	DAB	11/27/07
REVIEWED	MNM	11/27/07

PLOT DATE = 11/23/2009
FILE NAME = I:\32_jobs\0825294\CADD\Road\Microstation\Sheets\Section_2.5in-7in\IC-807_MARKER_FOUND_DET.dgn
PLOT SCALE = 1.5 ' / in.
PLOT SCALE = 1.0000 ' / in.
USER NAME = Hegan08951

© Copyright Hanson Professional Services Inc. 2009