CONTROLLER SEQUENCE

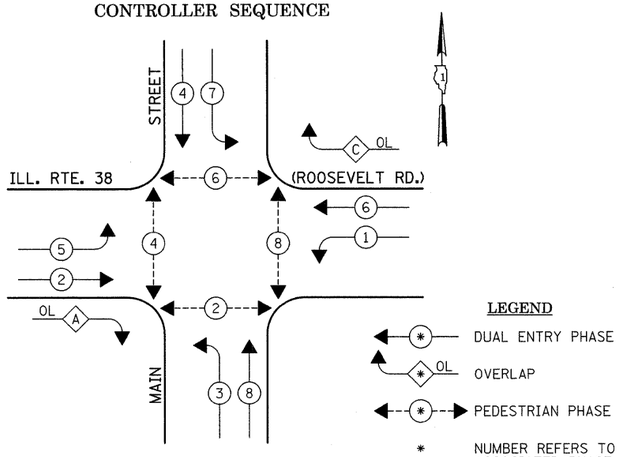

EXISTING PHASE DESIGNATION DIAGRAM

RIGHT TURN OVERLAP PHASE DESIGNATION

OVERLAP LETTER		PERMISSIVE PHASE		PROTECTED PHASE
A	=	2	+	3
C	=	6	+	7

EMERGENCY VEHICLE PREEMPTION SEQUENCE

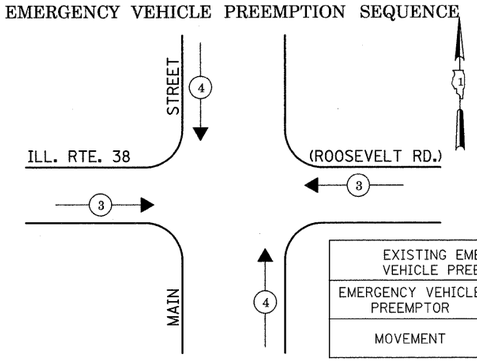

EXISTING EMERGENCY VEHICLE PREEMPTORS		
EMERGENCY VEHICLE PREEMPTOR	3	4
MOVEMENT	← →	↓ ↑

SCHEDULE OF QUANTITIES

QUANTITY	UNIT	ITEM
0.16	L SUM	TRAFFIC CONTROL AND PROTECTION STANDARD 701601
0.16	L SUM	TRAFFIC CONTROL AND PROTECTION STANDARD 701701
0.16	L SUM	TRAFFIC CONTROL AND PROTECTION STANDARD 701801
167	FOOT	ELECTRIC CABLE IN CONDUIT, SIGNAL NO. 14 2C
*271	FOOT	ELECTRIC CABLE IN CONDUIT, SIGNAL NO. 14 3C
664	FOOT	ELECTRIC CABLE IN CONDUIT, SIGNAL NO. 14 7C
4	EACH	TRAFFIC SIGNAL POST, GALVANIZED STEEL, 16 FT
1	EACH	MAINTENANCE OF EXISTING TRAFFIC SIGNAL INSTALLATION
4	EACH	SIGNAL HEAD, LED, 1-FACE, 3-SECTION, MAST ARM MOUNTED
4	EACH	SIGNAL HEAD, LED, 1-FACE, 5-SECTION, BRACKET MOUNTED
4	EACH	SIGNAL HEAD, LED, 1-FACE, 5-SECTION, MAST ARM MOUNTED
2	EACH	SIGNAL HEAD, LED, 2-FACE, 5-SECTION, BRACKET MOUNTED
8	EACH	PEDESTRIAN SIGNAL HEAD, LED, 1-FACE, BRACKET MOUNTED
8	EACH	TRAFFIC SIGNAL BACKPLATE
4	EACH	PEDESTRIAN PUSH-BUTTON
*2	EACH	CONFIRMATION BEACON
1	EACH	REMOVE EXISTING TRAFFIC SIGNAL EQUIPMENT

*100% COST TO VILLAGE OF LOMBARD

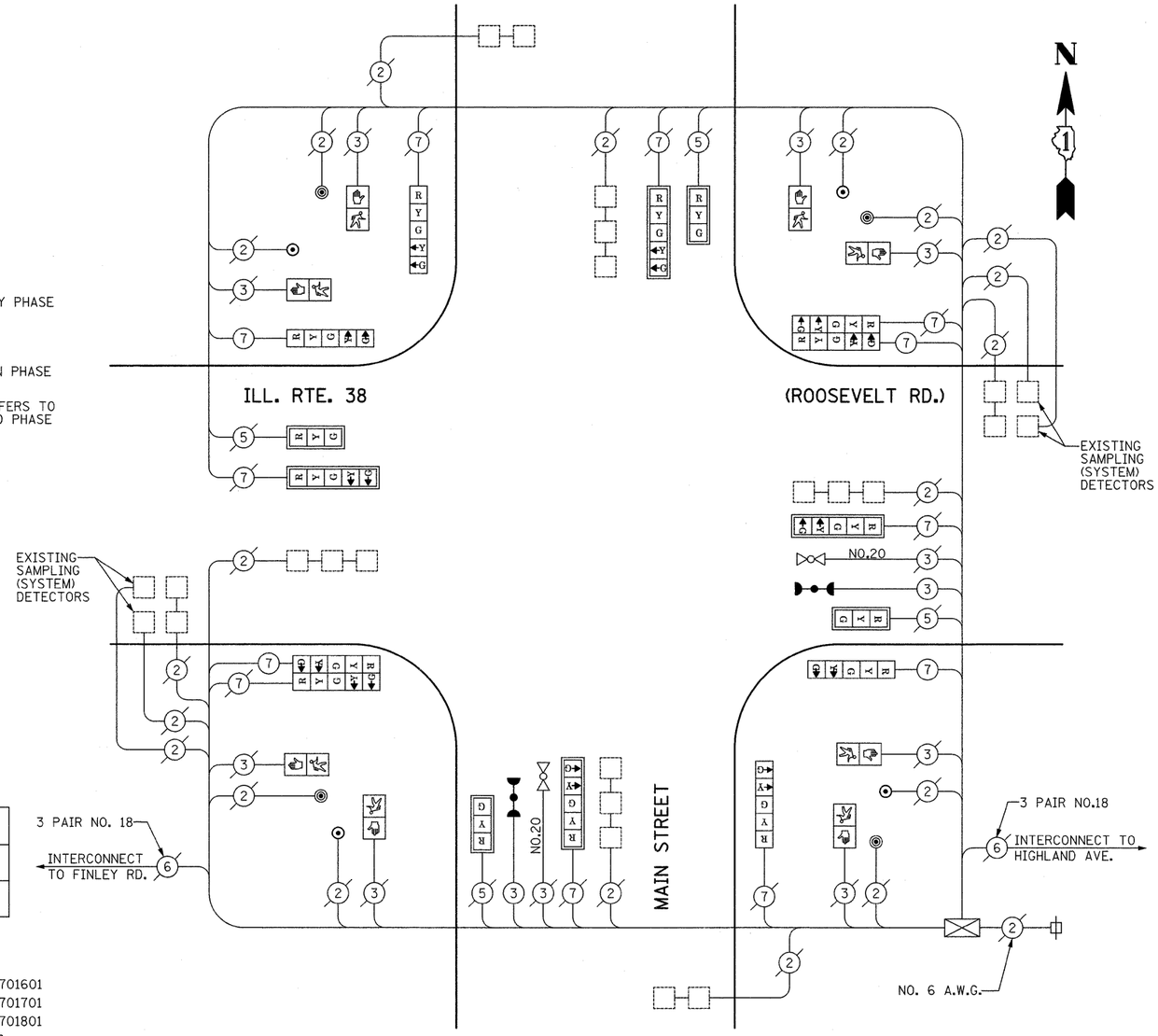

CABLE DIAGRAM

THE FOLLOWING ITEMS SHALL BE REMOVED BY THE CONTRACTOR AND SHALL BE DISPOSED OF BY THEM OUTSIDE THE RIGHT-OF-WAY AT THEIR EXPENSE. THE SALVAGE VALUE OF THE REMOVED EQUIPMENT SHALL BE REFLECTED IN THE CONTRACT BID PRICE.

4	EACH	TRAFFIC SIGNAL POST, 16 FT.
4	EACH	SIGNAL HEAD 1-FACE, 3-SECTION, MAST ARM MOUNTED
4	EACH	SIGNAL HEAD, 1-FACE, 5-SECTION, BRACKET MOUNTED
4	EACH	SIGNAL HEAD, 1-FACE, 5-SECTION, MAST ARM MOUNTED
6	EACH	PEDESTRIAN SIGNAL HEAD, 1-FACE, BRACKET MOUNTED
1	EACH	PEDESTRIAN SIGNAL HEAD, 2-FACE, BRACKET MOUNTED
4	EACH	PEDESTRIAN PUSH-BUTTON

CABLE PLAN LEGEND

EXISTING	PROPOSED	
G	G	8" (200mm) TRAFFIC SIGNAL SECTION
R	R	12" (300mm) TRAFFIC SIGNAL SECTION
W	W	12" (300mm) PEDESTRIAN SIGNAL SECTION
		12" (300mm) PEDESTRIAN SIGNAL SECTION
		CONTROLLER CABINET
		SERVICE INSTALLATION
T	T	TELEPHONE INSTALLATION
		VEHICLE DETECTOR, INDUCTION LOOP
		MAGNETIC DETECTOR
		EMERGENCY VEHICLE LIGHT DETECTOR
		CONFIRMATION BEACON
		PUSH-BUTTON DETECTOR
2	2	DENOTES NUMBER OF CONDUCTORS, ALL CABLE NO. 14 EXCEPT AS INDICATED. ALL LOOP DETECTOR CABLE TO BE SHIELDED.
1	1	GROUND CABLE IN CONDUIT NO.6 SOLID COPPER (GREEN)
24	24	FIBER OPTIC CABLE IN CONDUIT NO. 62.5125 2-MM12F & SM12F
R Y G Y G "P"	R Y G Y G "P"	SIGNAL FACE WITH BACKPLATE. "P" INDICATES PROGRAMMED HEAD.
R R	R R	RAILROAD CONTROL CABINET
		ILLUMINATED SIGN, FIBER OPTIC "NO LEFT TURN"
		ILLUMINATED SIGN, FIBER OPTIC "NO RIGHT TURN"
H/C	H/C	GROUND ROD AT HANDHOLE, DOUBLE HANDHOLE, OR CONTROLLER
P	P	GROUND ROD AT POST OR MAST ARM POLE
S	S	GROUND ROD AT ELECTRIC SERVICE INSTALLATION
	M C	LOCAL AND MASTER CONTROLLER
		MICROWAVE VEHICLE SENSOR
B	B	UPS-BATTERY BACK-UP

FILE NAME = W:\email\Roosevelt\10_Roosevelt Rd @ Main St_CD.dgn	USER NAME = leysa	DESIGNED -	REVISED -
		DRAWN -	REVISED -
	PLOT SCALE = 20.0000 ' / IN.	CHECKED -	REVISED -
	PLOT DATE = 12/11/2008	DATE -	REVISED -

STATE OF ILLINOIS
DEPARTMENT OF TRANSPORTATION

CABLE DIGRAM, PHASE DESIGNATION DIAGRAM
SCHEDUAL OF QUANTITIES,
MAIN STREET AT ROOSEVELT ROAD (IL.RTE.38)

SCALE: SHEET NO. OF SHEETS STA. TO STA.

F.A. RTE.	SECTION	COUNTY	TOTAL SHEETS	SHEET NO.
347	2008-066 TS	DUPAGE		10

CONTRACT NO. 60F54

FED. ROAD DIST. NO. | ILLINOIS | FAP 347/ILL 38 (ROOSEVELT RD.)