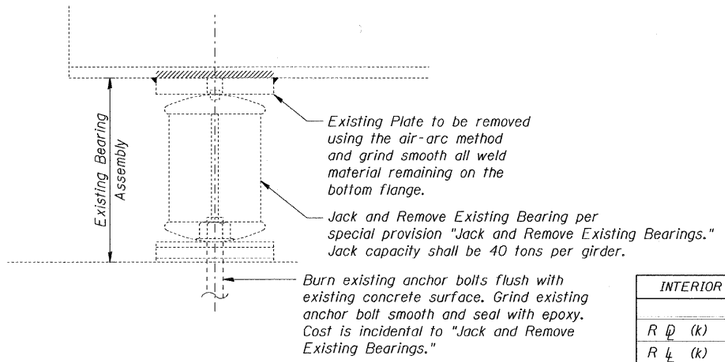

EXISTING BEARING REMOVAL DETAIL

INTERIOR GIRDER REACTION TABLE	
	Abut.
R ℄ (k)	48.1
R ⊥ (k)	37.7
Imp. (k)	8.4
R_{Total} (k)	94.2

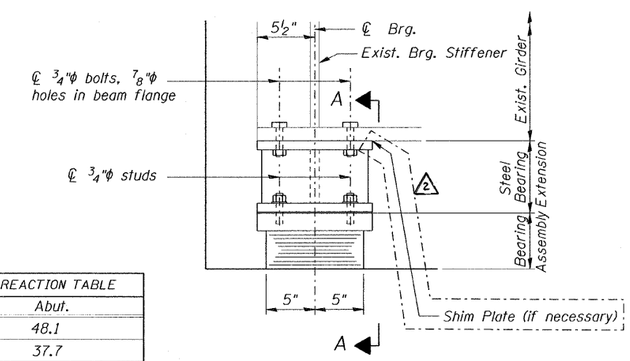

ELEVATION AT ABUT.

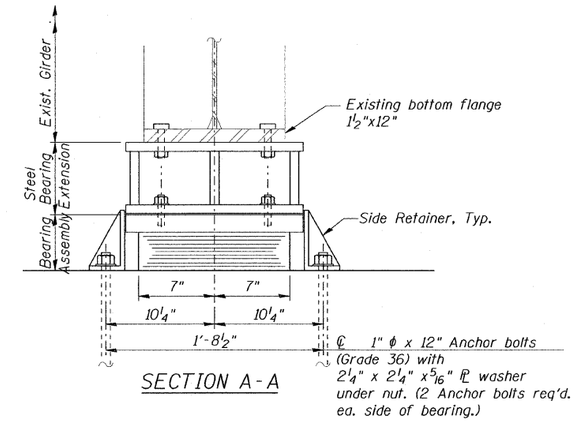

SECTION A-A

TYPE I ELASTOMERIC EXP. BRG.

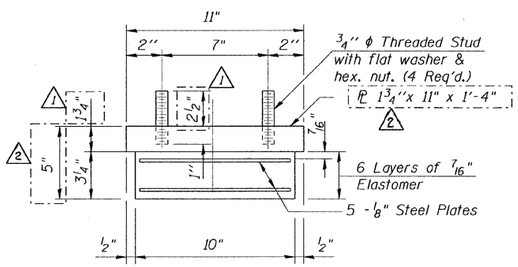

BEARING ASSEMBLY

Note:
Shim plates shall not be placed under Bearing Assembly.

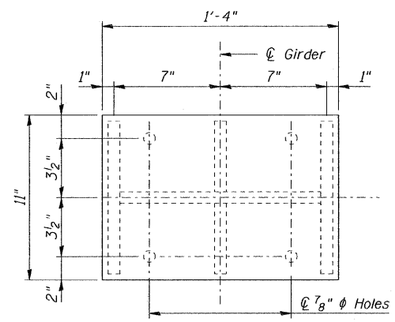

PLAN STEEL BEARING EXTENSION

Notes:

Anchor bolts shall be ASTM F1554 all-thread (or an Engineer-approved alternate material) of the grade(s) and diameter(s) specified. ASTM A307 Grade C anchor bolts may be used in lieu of ASTM F1554 Grade 36 (Fy=36ksi). The corresponding specified grade of AASHTO M314 anchor bolts may be used in lieu of ASTM F1554.

Drilled and set anchor bolts shall be installed according to Article 521.06 of the Standard Specifications.

Side retainers, shall be included in the cost of Elastomeric Bearing Assembly, Type I.

The structural steel plates of the Bearing Assembly and the Steel Bearing Extension shall conform to the requirements of AASHTO M 270 Grade 36.

Prior to ordering any material, the Contractor shall verify in the field all bearing height and shim thickness dimensions.

Diaphragm removal and reinstallation may be required to facilitate drilling holes. Cost included with Furnishing and Erecting Structural Steel.

New Steel extensions, shim plates and connection bolts are included with Furnishing and Erecting Structural Steel.

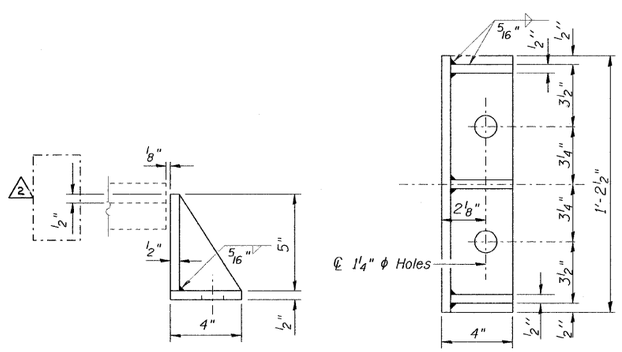

SIDE RETAINER

Equivalent rolled angle with stiffeners will be allowed in lieu of welded plates.

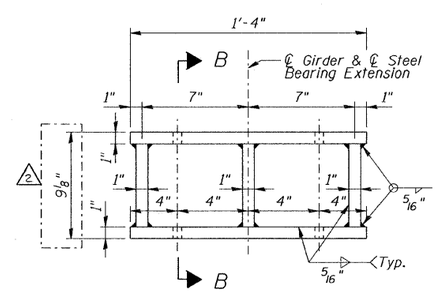

ELEVATION STEEL BEARING EXTENSION

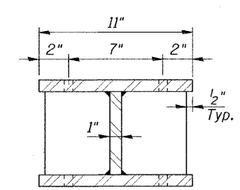

SECTION B-B

STEEL BEARING EXTENSION

BILL OF MATERIAL

Item	Unit	Total
Jack and Remove Existing Bearings	Each	8
Elastomeric Bearing Assembly, Type I	Each	8
Anchor Bolts, 1"	Each	32
Furnishing and Erecting Structural Steel	Pound	1,520

DESIGNED	S.D.H.
CHECKED	E.E.J.
DRAWN	M.S.M.
CHECKED	S.D.H.

△2 REVISED 2-18-09

TYPE I ELASTOMERIC BEARING
C.H. 25 (286th STREET) OVER I-88
F.A.I. ROUTE 88
SECTION: BRIDGE DECK REPAIRS 2007-1
ROCK ISLAND COUNTY
STATION 2008+40.54
S.N. 081-0126

DATE: 12-09-08

GRAEF, ANHALT, SCHLOEMER & ASSOCIATES INC
CHICAGO ILLINOIS

n:\jobs2008\plot\2001-40\4.09\081-0126\CH26_50th Ave.)\00\081-0126-S16.dgn
2/5/2009