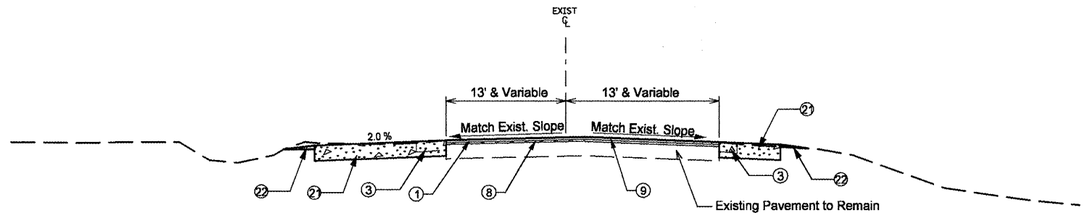


STA. 134+75.00 - 135+50.00

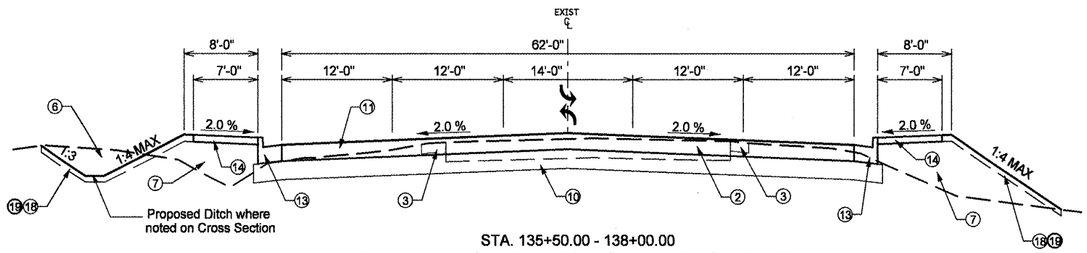


STA. 135+50.00 - 138+00.00
Pavement varies from 60' to 62' from Sta. 135+50 to Sta. 136+52.85.

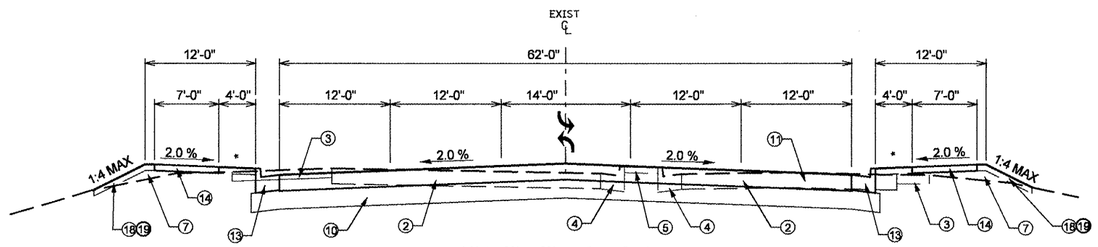


* Note: 2% or 6% see Cross Sections

STA. 138+00.00 - 143+50.14
STA. 145+45.12 - 147+18.68
STA. 148+05.05 - 148+43.87
STA. 149+39.77 - 151+54.59
STA. 152+58.51 - 153+16.73
STA. 156+95.38 - 161+27.69
STA. 162+17.01 - 168+75.00
STA. 175+52.74 - 177+75.29
STA. 180+83.37 - 184+89.52
STA. 186+25.52 - 187+85.07

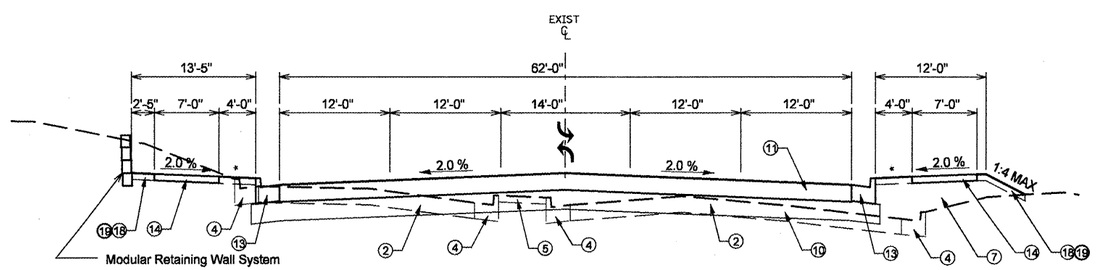


* Note: 2% or 6% see Cross Sections

STA. 147+18.68 - 148+05.05
STA. 151+54.59 - 152+58.51

## LEGEND:

1. HOT-MIX ASPHALT SURFACE REMOVAL - VARIABLE DEPTH
2. PAVEMENT REMOVAL
3. PAVED SHOULDER REMOVAL
4. COMBINATION CURB AND GUTTER REMOVAL
5. MEDIAN SURFACE REMOVAL
6. EXCAVATION
7. EMBANKMENT
8. POLYMERIZED LEVELING BINDER (MACHINE METHOD), N50, 3/4"
9. POLYMERIZED HOT-MIX ASPHALT SURFACE COURSE, MIX "D", N70, 1½"
10. SUB-BASE GRANULAR MATERIAL, TYPE A 12"
11. PORTLAND CEMENT CONCRETE PAVEMENT 10" (JOINTED)
12. COMBINATION CONCRETE CURB AND GUTTER, TYPE B-6.12
13. COMBINATION CONCRETE CURB AND GUTTER, TYPE B-6.24
14. PORTLAND CEMENT CONCRETE SIDEWALK 4"
15. PORTLAND CEMENT CONCRETE SIDEWALK 4", SPECIAL
16. PORTLAND CEMENT CONCRETE SIDEWALK 6"
17. PORTLAND CEMENT CONCRETE SIDEWALK 6", SPECIAL
18. TOPSOIL FURNISH & PLACE, 4"
19. SODDING SALT TOLERANT OR SEEDING, CLASS 2A
20. PORTLAND CEMENT CONCRETE DRIVEWAY PAVEMENT 6" OR 8"
21. TEMPORARY PAVEMENT
22. AGGREGATE SHOULDER, TYPE B

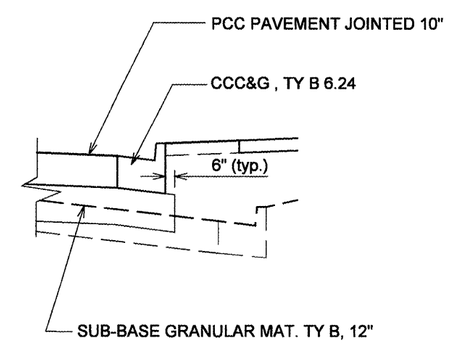


| | | | | | | | | | | | |
|---|---|---|---|---|---|---|---|---|---|---|---|
| FILE NAME = typical section.dgn | USER NAME = crespole | DESIGNED - | REVISED - | STATE OF ILLINOIS DEPARTMENT OF TRANSPORTATION | PROPOSED TYPICAL SECTIONS | F.A.P RTE. | SECTION | COUNTY | TOTAL SHEETS | SHEET NO. |
| | | DRAWN - | REVISED - | | | 399 | 36 R-8 | TAZEWELL | 429 | 33 |
| | PLOT SCALE = 15.0685 ' / IN. | CHECKED - | REVISED - | | | | | CONTRACT NO. 68258 | | |
| | PLOT DATE = 12/22/2008 | DATE - | REVISED - | | SCALE: SHEET NO. OF SHEETS STA. TO STA. | FED. ROAD DIST. NO. 4 | ILLINOIS | FED. AID PROJECT | | |