ROUTE NO.	SECTION	COUNTY	TOTAL SHEETS	SHEET NO.
F.A.I. 55	(68-4)F	MONTGOMERY	145	52
FED. ROAD DIST. NO. 7	ILLINOIS	FED. AID PROJECT-		

SHEET NO. 12
23 SHEETS

Contract #72C32

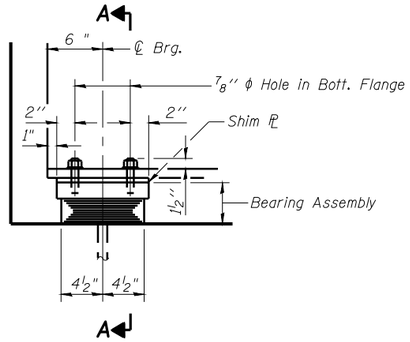

ELEVATION AT N. ABUT.

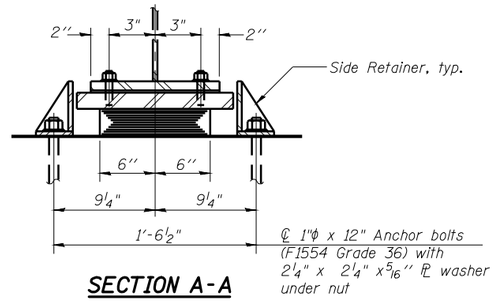

SECTION A-A

TYPE I ELASTOMERIC EXP. BRG.
(14 Required)

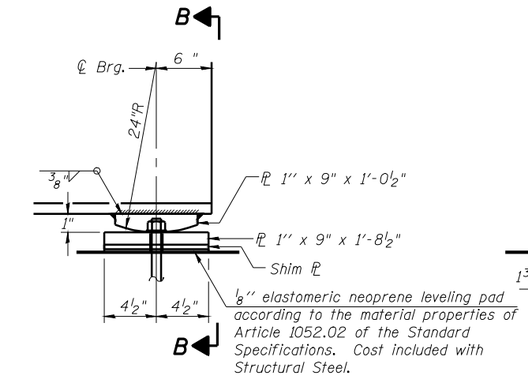

ELEVATION AT S. ABUT.

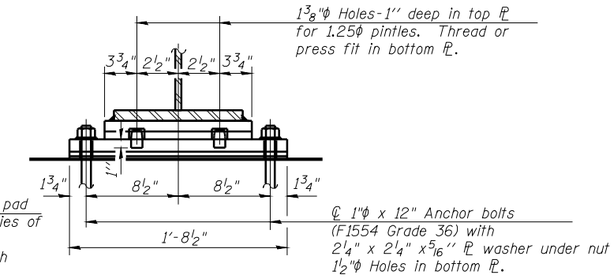

SECTION B-B

FIXED BEARING

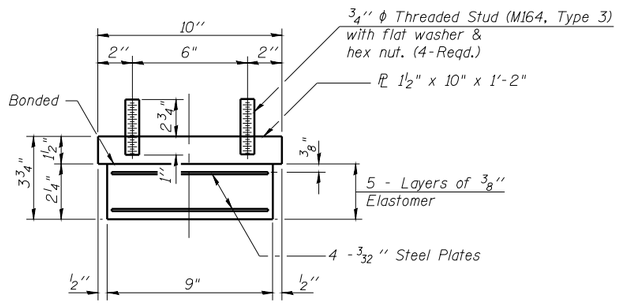

BEARING ASSEMBLY

Note:
Shim plates shall not be placed under Bearing Assembly.

Notes:
Anchor bolts shall be ASTM F1554 all-thread (or an Engineer-approved alternate material) of the grade(s) and diameter(s) specified. ASTM A307 Grade C anchor bolts may be used in lieu of ASTM F1554 Grade 36 (Fy=36ksi). The corresponding specified grade of AASHTO M314 anchor bolts may be used in lieu of ASTM F1554.

Anchor bolts at fixed bearings may be either cast in place or installed in holes drilled after the supported member is in place.

Anchor bolts for side retainers may be cast in place or installed in holes drilled before or after members are in place.

Drilled and set anchor bolts shall be installed according to Article 521.06 of the Standard Specifications.

Side retainers and other steel members required for the bearing assembly shall be included in the cost of Elastomeric Bearing Assembly, Type I.

The structural steel plates of the bearing assembly shall conform to the requirements of AASHTO M270 Grade 50W.

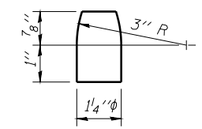

PINTLE

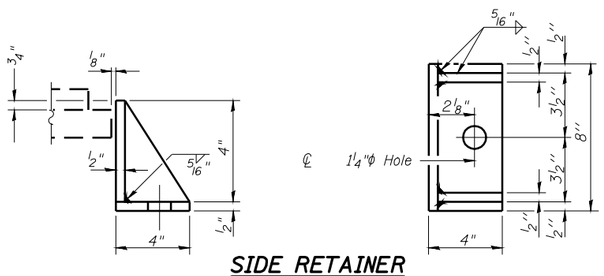

SIDE RETAINER
Equivalent rolled angle with stiffeners will be allowed in lieu of welded plates.

BILL OF MATERIAL

Item	Unit	Total
Elastomeric Bearing Assembly Type I	Each	14
Anchor Bolts 1"	Each	56

ILLINOIS DEPARTMENT OF TRANSPORTATION

BEARING DETAILS
I 55 OVER MACOUPIN CREEK
F.A.I. ROUTE 55 - SEC. (68-4)F
MONTGOMERY COUNTY
STATION 1066+03.18
STRUCTURE NO. 068-0038 N.B.
STRUCTURE NO. 068-0039 S.B.

DATE: 04-08
REVISED:
DRAWN BY: MLO
CHECKED BY: PBB

I-2-E1 11-1-06