STATE OF ILLINOIS
DEPARTMENT OF TRANSPORTATION

ROUTE NO.	SECTION	COUNTY	TOTAL SHEETS	SHEET NO.
F.A.P. 805			30	10
FED. ROAD DIST. NO. 7	ILLINOIS	FED. AID PROJECT-		

SHEET NO. 3
14 SHEETS

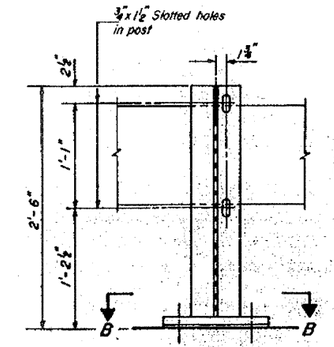

SECTION A-A

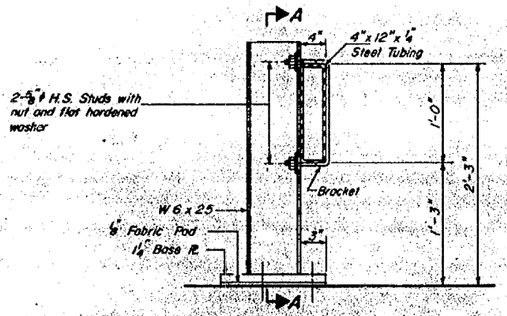

SECTION AT RAIL POST

ALTERNATE I

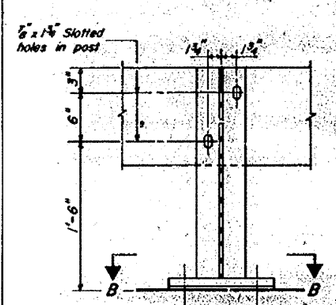

SECTION A-A

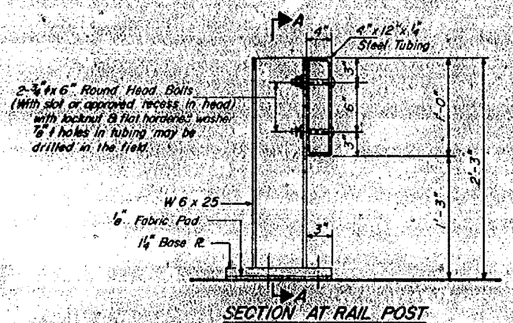

SECTION AT RAIL POST

ALTERNATE II

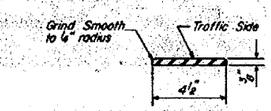

DETAIL A

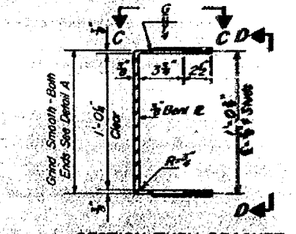

SECTION THRU BRACKET

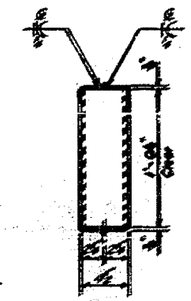

VIEW D-D

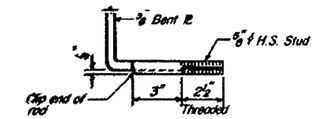

VIEW E-E

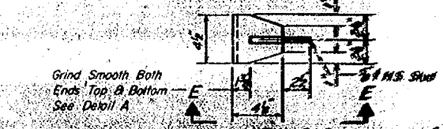

VIEW C-C

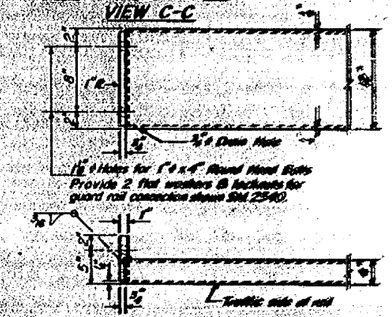

END OF RAIL DETAILS

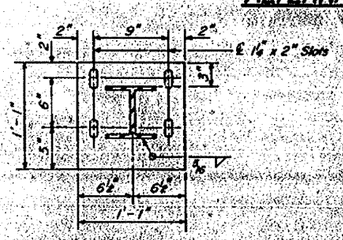

SECTION B-B

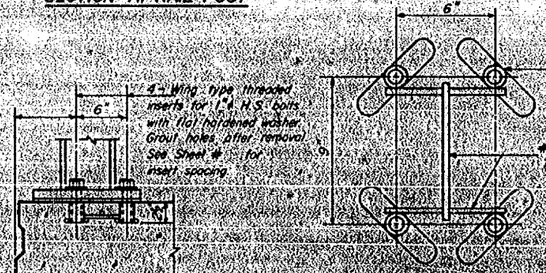

INSERT DETAIL

R.P.C. DECK BEAMS

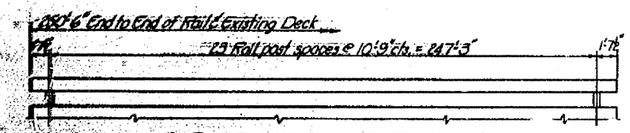

ELEVATION EXISTING DECK

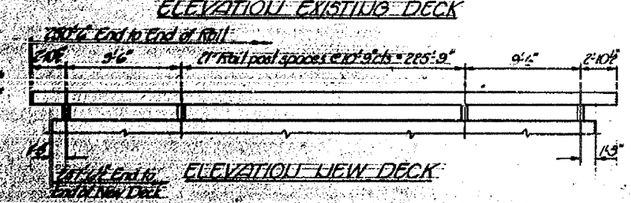

ELEVATION NEW DECK

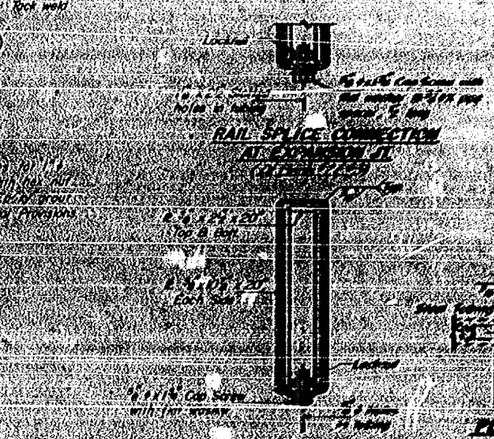

RAIL SPLICE CONNECTION AT EXPANSION JT

SECTION AT RAIL SPLICE

PLAN - BOTT SPLICE PL. TYPICAL

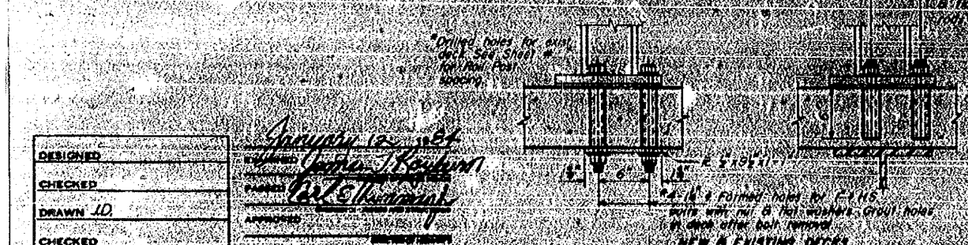

NEW & EXISTING DECKS
ANCHORAGE DETAILS

NOTES

Hollow structural steel tubing shall conform to the requirements of A.S.T.M. designation A-500 Grade B Structural Steel Tubing.

All other steel shapes and plates shall conform to the requirements of A.A.S.H.T.O. M-183 except posts and brackets shall conform to A.A.S.H.T.O. M 223 Grade 50.

Bolts, cap screws, and nuts shall conform to the requirement of A.S.T.M. designation A-307 except for high strength bolts, threaded rods, studs, nuts and washers noted which shall conform to A.A.S.H.T.O. M-164.

The bridge rail shall receive one shop coat of a steel prime paint.

The 1"ø high strength bolts or threaded rods used to connect the railposts shall be tightened in accordance with Article 507.04(g)(3) of the Standard Specification.

See Special Provisions for Temporary Bridge Rail.

See sheet # for Rail Post spacing.

The contact surfaces between post flange, rail and inside face of bracket for Alternate I shall be free of all lubricants.

The nut for 5/8"ø high strength studs used in Alternate I to connect bracket to post shall be tightend to a snug fit and given an additional one half turn.

BILL OF MATERIAL

Item	Unit	Quantity
Temporary Bridge Rail	Lin. Ft.	251

6" ø rail splice
1/2 of this joint at 50'-0" at Bents #2 & #3

DESIGNED	January 12, 1984	
CHECKED	James T. Rockwell	
DRAWN J.D.	Ed Eichenauer	
CHECKED		

R-25 6-1-82 (10'-9" Maximum Post Spacing)

TEMPORARY BRIDGE RAIL
F.A.P. RT. 805 SEC. 126-BR
CLINTON COUNTY
STA. 1119+05.00

FOR INFORMATION ONLY

FILE NAME = c:\pw_work\pwidot\gelinh\dms51845\plnB0526a.dgn	USER NAME = gelinh	DESIGNED - HG	REVISED - ---
		DRAWN - HG	REVISED - ---
	PLOT SCALE = 183.6465 ' / IN.	CHECKED - ---	REVISED - ---
	PLOT DATE = 12/9/2008	DATE - --------	REVISED - ---

STATE OF ILLINOIS
DEPARTMENT OF TRANSPORTATION

EXISTING STRUCTURE

SCALE: 1" = 50' | SHEET NO. __ OF ___ SHEETS | STA. _____ TO STA. _____

F.A.P. RTE.	SECTION	COUNTY	TOTAL SHEETS	SHEET NO.
805	126-BR-1	CLINTON	85	68

CONTRACT NO. 76976

FED. ROAD DIST. NO. _ | ILLINOIS | FED. AID PROJECT